LAND USE BYLAW NO. 2020-028
March 2021

(Consolidated to Bylaw 2026-021, July 2026)



Prepared By:



March 2021

© 2021 Oldman River Regional Services Commission

Prepared for Vulcan County

This document is protected by Copyright and Trademark and may not be reproduced or modified in any manner, or for any purpose, except by written permission of the Oldman River Regional Services Commission. This document has been prepared for the sole use of the Municipality addressed and the Oldman River Regional Services Commission. This disclaimer is attached to and forms part of the document.

VULCAN COUNTY

Vulcan - Alberta

BYLAW 2020-028

Being a bylaw of Vulcan County in the Province of Alberta, to adopt Bylaw No. 2020-028, being the municipal Land Use Bylaw.

WHEREAS the Council of the County wishes to adopt a new Land Use Bylaw to comply with the land use provisions established in the Municipal Government Act, Revised Statutes of Alberta 2000, Chapter M-26, as amended;

AND WHEREAS the Land Use Bylaw provides for the regulation of the use and development of lands, buildings and structures within the County;

AND WHEREAS the purpose of the proposed bylaw is to:

- Update and establish standards and procedures regarding the use, subdivision and development of land within the municipality;
- Incorporate the mandatory changes required for land use bylaws prescribed in the Municipal Government Act;
- Incorporate additional land use districts along with an expanded number of land use definitions;
- Amend the existing land use district maps to reflect several land use redesignations which have been made;
- Incorporate a new format for mapping in Schedule 1;
- Add additional schedules and appendices that will govern development in the municipality;

AND WHEREAS it is deemed expedient and appropriate for Vulcan County to consider Bylaw No. 2020-028 for the above-noted reasons;

NOW THEREFORE, under the authority and subject to the provisions of the Municipal Government Act, Revised Statutes of Alberta 2000, Chapter M-26, as amended, the Council of Vulcan County duly assembled does hereby enact the following:

1. Bylaw No. 2010-010, being a former Land Use Bylaw, and any amendments thereto are hereby rescinded.

2. Bylaw No. 2020-028 shall come into effect upon third and final reading thereof.

3. Bylaw No. 2020-028 shall be consolidated, with any necessary formatting, renumbering, and/or any required, non-material, grammatical and typographical edits.

Received first reading this 27 day of January, 2021

Jason Schneider, Reeve

Nels Petersen, CAO

Received second reading this 10 day of March, 2021

Jason Schneider, Reeve

Nels Petersen, CAO

Received third reading and finally passed this 10 day of March, 2021

Jason Schneider, Reeve

Nels Petersen, CAO

Vulcan County Land Use Bylaw No. 2020-028 – Amendments

Bylaw No.	Amendment Description	Legal Description	Passed
2022-005	Redesignate: “Rural General – RG” to “Single Lot Country Residential – SCR”	Portion of NE1/4 9-15-19-W4	9-Mar-2022
2022-021	Addition of provisions for returning amendment applications. Addition of definitions for Floor Area and minimum floor area requirements for Grouped County Residential (GCR) and Grouped Reservoir Residential (GRR) Land Use Districts Addition of “Abattoir” as discretionary use in Vulcan Industrial Park (VIP) Land Use District. Addition of provision regarding secondary front yard setbacks in Section 3 of Vulcan Industrial Park (VIP) Land Use District. Amend fencing provisions in Section 14 of Vulcan Industrial Park (VIP) Land Use District. Addition of definitions and standards for data processing operations, and “Data Processing Operation” as a discretionary use in Rural Industrial (RI) Land Use District.		3-Aug-2022
2022-022	Redesignate: "Urban Fringe - UF" to "Rural General - RG"	Portion of SW 1/4 11-16-20-W4M, containing approximately 3.14 ha (7.76 acres).	13-Jul-2022
2022-023	Redesignate: "Urban Fringe - UF" to "Rural General - RG"	Portion of SE 1/4 11-16-20-W4M, containing approximately 3.14 ha (7.76 acres)	13-Jul-2022
2022-024	Redesignate: "Reservoir Vicinity - RV" to "Rural General - RG"	Portion of SW 1/4 34-16-21-W4M, containing approximately 3.04 ha (7.52 acres).	15-Jun-2022
2022-026	Redesignate: “Rural General – RG” to “Small Holdings – SH”	Portion of SW1/4-12-17-25- W4, containing approximately 5.54 ha (11.21 acres).	7-Sept-2022
2022-034	Defining and allocating uses for Short-Term Rentals including off-street parking requirements. Remove Bed & Breakfast from all Land Use Districts. Adding Agricultural Processing as a use in Rural General. Establishing fencing requirements. Establishing standards for modular home foundations Regulating recreational vehicles in Hamlet Residential. Amend legal description for Section 7.2 Grouped Reservoir Residential District. Delete Section 3 Accessory Building Preceding Principal Structure from Schedule 5. Remove Accessory Building, Structure or Use (Prior to principal building or use) from all land use districts. Various non-material textual amendments.		1-Feb-2023
2022-038	Redesignate: “Rural General – RG” to “Rural Commercial – RC”	Portion of NE1/4 36-20-25-W4 containing approximately 3.8 ha (9.4 acres).	11-Jan-2023

Bylaw No.	Amendment Description	Legal Description	Passed
2023-008	Redesignate: "Rural General - RG" to "Small Holdings - SH"	Portion of SE 1/4 29-16-26-W4M, containing approximately 2.02 +/- ha (5.00 +/- acres)	5-Apr-2023
2023-009	Redesignate: "Rural General - RG" to "Small Holdings - SH"	Portion of NE 1/4 20-16-26-W4M, containing approximately 2.02 +/- ha (5.00 +/- acres).	5-Apr-2023
2023-017	Amend the Notification and Consultation provisions included in Schedule 5, Section 32.2.		21-Jun-2023
2023-026	Amend the Notification and Consultation provisions in Section 32.27 in Schedule 5 to require a public information meeting for industrial and commercial energy projects.		18-Oct-2023
2023-027	Addition of minimum floor area requirement to the HR, UF, and RV land use districts within Schedule 2.		18-Oct-2023
2023-029	Redesignate: “Urban Fringe – UF” to “Rural Recreational – RR”	Portion of Plan 8810587, Block 3, containing approximately 20.83 ha (51.47 acres).	7-Feb-2024
2024-015	Redesignate: “Rural General – RG” to “Grouped Country Residential – GCR”	Portion of NE ¼ 32-19-25-W4M	21-Aug-2024
2024-020	Redesignate: “Urban Fringe – UF” to “Small Holdings – SH”	Portion of SE 28-20-23-W4M	2-Oct-2024
2024-021	Redesignate: “Rural General – RG” to “Small Holdings – SH”	Portion of SE 12-21-26-W4M	2-Oct-2024
2024-022	Various amendments to the Administration Section. Addition of provision regarding Accessory Buildings to all land use districts in Schedule 2. Remove criteria from the Manufactured dwelling 1 use in the GRR district in Schedule 2. Amendment to minimum floor area, section 5.2, of the GRR District. Various amendments to Use Definitions. Various amendments to Standards of Development Schedule 5.		16-Oct-2024
2024-023	Redesignate: “Rural General – RG” to “Small Holdings – SH”	Portion of SE 23-21-25-W4M	13-Nov-2024
2025-004	“Hamlet Residential – HR” to ”Rural General – RG”	Portion of Lot 1, Block 9, Plan 1110752	5-Feb-2025
2025-008	Addition of Mixed Use Development to the Vulcan Industrial Park land use district. Addition of Dwelling Unit, Combined to Public Service land use district.		21-May-2025
2025-026	“Rural General – RG” to “Grouped Country Residential – GCR”	Portion of SE 17-18-25-W4M	16-July-2025
2025-027	“Rural General – RG” to “Rural Commercial – RC”	Portion of SE 1-19-22-W4M	16-July-2025
2026-004	Addition of Battery Energy Storage Systems and associated standards.		25-Feb-2026
2026-007	“Rural General – RG” to “Rural Industrial – RI”	Portions of Section 14-15-21-W4M	17-Jun-2026
2026-021	“Rural General – RG” to “Rural Commercial – RC”	Portion of NW 34-18-26-W4M	15-Jul-2026

TABLE OF CONTENTS

ADMINISTRATION

General

Section 1 Title ..... | 1
Section 2 Scope ..... | 1
Section 3 Purpose ..... | 1
Section 4 Repeal of Former Bylaw ..... | 1
Section 5 Metric and Imperial Measurements ..... | 1
Section 6 Definitions ..... | 1
Section 7 Forms and Fees ..... | 2
Section 8 Compliance with the Legislative and Bylaw Requirements ..... | 2
Section 9 Sections Found to be Invalid ..... | 2
Section 10 Rules of Interpretation ..... | 3
Section 11 Appendices ..... | 3

Approving Authorities

Section 12 Development Authority ..... | 3
Section 13 Subdivision Authority ..... | 4
Section 14 Development Officer – Powers and Duties ..... | 4
Section 15 Municipal Planning Commission – Powers and Duties ..... | 5
Section 16 Council ..... | 5
Section 17 Subdivision and Development Appeal Board (SDAB) ..... | 5

Development and Subdivision in General

Section 18 Land Use Districts ..... | 6
Section 19 Suitability of Sites ..... | 6
Section 20 Number of Dwelling Units on a Parcel ..... | 7
Section 21 Non-Conforming Buildings and Uses ..... | 7
Section 22 Development on Non-Conforming Sized Lots ..... | 8
Section 23 Development Agreements ..... | 8
Section 24 Guaranteed Security Triggered by Development Permits ..... | 8
Section 25 Minimum Distance Separation Calculations ..... | 9
Section 26 Architectural Controls ..... | 9
Section 27 Municipal Approval for Encroachments ..... | 10
Section 28 Certificate of Compliance ..... | 10

Development Permit Rules and Procedures

Section 29 Development Permit – When Required ..... | 10
Section 30 Development Not Requiring a Development Permit ..... | 10
Section 31 Development Permit Application ..... | 10
Section 32 Determination of Complete Development Permit Application ..... | 12
Section 33 Permitted Use Applications ..... | 13
Section 34 Discretionary Use Applications ..... | 14
Section 35 Development Permit Conditions ..... | 15
Section 36 Additional Planning Requirements ..... | 15
Section 37 Direct Control Districts ..... | 15
Section 38 Development Permits in Direct Control Districts ..... | 16
Section 39 Similar Use ..... | 16
Section 40 Temporary Use ..... | 16
Section 41 Applications Requiring a Variance ..... | 17
Section 42 Limitations on Variance Provisions ..... | 18
Section 43 Notification of Adjacent Landowners and Persons Likely Affected ..... | 18
Section 44 Notice of Decision for Development Permits ..... | 19
Section 45 Establishment of Development ..... | 19
Section 46 Failure to Make a Decision – Deemed Refused ..... | 20
Section 47 Development Permit Validity & Ongoing Use ..... | 20
Section 48 Development Permit Extension ..... | 20
Section 49 Changes to a Development Permit ..... | 21
Section 50 Transferability of Development Permit ..... | 21
Section 51 Reapplication for a Development Permit ..... | 22
Section 52 Suspension or Cancellation of a Permit..... | 22

Subdivision Rules and Procedures

Section 53 Subdivision Applications ..... | 22
Section 54 Incomplete Subdivision Applications ..... | 24
Section 55 Subdivision Approval Validity ..... | 24

Appeals and Enforcement

Section 56 Appeals and Procedures ..... | 24
Section 57 Notice of Violation ..... | 25
Section 58 Stop Orders ..... | 25
Section 59 Enforcement of Stop Orders ..... | 25
Section 60 Penalties and Right of Entry ..... | 26

Amendments

Section 61 Amendments to the Land Use Bylaw ..... | 26
Section 62 Land Use Redesignation Application Requirements ..... | 27
Section 63 Area Structure Plan Requirement ..... | 28
Section 64 Decisions on Amendments to the Land Use Bylaw ..... | 28
Section 65 Land Use Redesignation Reapplication ..... | 29
Section 66 Rescinding Land Use Redesignations Amending Bylaws ..... | 29

ADMINISTRATIVE DEFINITIONS

Section 67 Administrative Definitions ..... | 30

Schedule 1 **LAND USE DISTRICTS AND MAPS** ..... SCHEDULE 1 | 1

Section 1 Land Use Districts ..... | 1
Section 2 Hamlets ..... | 1

Schedule 2 **LAND USE DISTRICT REGULATIONS** ..... SCHEDULE 2 | 1

RURAL GENERAL – RG ..... SCHEDULE 2 – RG | 1
SINGLE LOT COUNTRY RESIDENTIAL – SCR ..... SCHEDULE 2 – SCR | 1
SMALL HOLDINGS – SH ..... SCHEDULE 2 – SH | 1
GROUPED COUNTRY RESIDENTIAL – GCR ..... SCHEDULE 2 – GCR | 1
GROUPED RESERVOIR RESIDENTIAL – GRR ..... SCHEDULE 2 – GRR | 1
HAMLET RESIDENTIAL – HR ..... SCHEDULE 2 – HR | 1
HAMLET COMMERCIAL – HC ..... SCHEDULE 2 – HC | 1
RURAL COMMERCIAL – RC ..... SCHEDULE 2 – RC | 1
VULCAN INDUSTRIAL PARK – VIP ..... SCHEDULE 2 – VIP | 1
RURAL INDUSTRIAL – RI ..... SCHEDULE 2 – RI | 1
RURAL RECREATIONAL – RR ..... SCHEDULE 2 – RR | 1
RESERVOIR VICINITY – RV ..... SCHEDULE 2 – RV | 1
URBAN FRINGE – UF ..... SCHEDULE 2 – UF | 1
PUBLIC SERVICE – PS ..... SCHEDULE 2 – PS | 1
DIRECT CONTROL – DC ..... SCHEDULE 2 – DC | 1

USE DEFINITIONS ..... SCHEDULE 2 - USE DEFINITIONS | 1

Schedule 3 **DEVELOPMENT NOT REQUIRING A DEVELOPMENT PERMIT** ..... SCHEDULE 3 | 1

Section 1 Development Not Requiring a Development Permit ..... | 1

Schedule 4 **LAND SUITABILITY AND SERVICING REQUIREMENTS** ..... SCHEDULE 4 | 1

Section 1 Applicability ..... | 1
Section 2 Access ..... |1
Section 3 Water Bodies and River Valleys..... |2
Section 4 Lands Subject to Flooding ..... |3
Section 5 Lands Subject to Subsidence or Erosion..... |5
Section 6 Contaminated Lands and Brownfield Development ..... |6
Section 7 Environmentally Significant Areas (ESAs) ..... |7
Section 8 Solid Wastes Disposal ..... |8
Section 9 Drainage, Grading and Retaining Walls ..... |8
Section 10 Storm Water Management ..... |8
Section 11 Water Supply..... |9
Section 12 Sewage Disposal..... |9

Schedule 5 **STANDARDS OF DEVELOPMENT** ..... SCHEDULE 5 | 1

Section 1 Abandoned Wells ..... | 1
Section 2 Abattoirs ..... |1
Section 3 Airport and Aerodromes ..... |2
Section 4 Anhydrous Ammonia Storage Facilities ..... |2
Section 5 Architectural Controls ..... |3
Section 6 Automotive Repair and Paint Shops ..... |3
Section 7 Auto Recycling and Salvage Yards ..... |3
Section 8 Shor-Term Rentals ..... |4
Section 9 Building Design, Character, Appearance and Quality of Development ..... |4
Section 10 Buildings with Live/Work Units ..... |5
Section 11 Campgrounds and Recreational Vehicle Parks ..... |5
Section 12 Cannabis Production Facilities ..... |7
Section 13 Cannabis Retail Store ..... |7
Section 14 Car and Livestock Truck and Trailer Wash Facilities ..... |8
Section 15 Child Care Facilities ..... |8
Section 16 Dugouts ..... |9
Section 17 Exposed Foundations and Exterior Building Finishes ..... |9
Section 18 Group Home ..... |10
Section 19 Heritage Conservation/Historical Sites and Variance Provisions ..... |11
Section 20 Home Occupations ..... |11
Section 21 Kennels ..... |13
Section 22 Lands Affected by the Majorville Guidelines for Land and Resource Management ..... |14
Section 23 Lands Affected by the Wyndham-Carseland Area Structure Plan ..... |14
Section 24 Lands Affected by the Reservoir Area Structure Plan ..... |14
Section 25 Landscaping Standards and Guidelines ..... |15
Section 26 Manufactured / Modular / Ready-To-Move / Moved-In Dwelling Standards ..... |16

Section 27 Motor Sports Park ..... |18
Section 28 Natural Resource Extractive Uses ..... |18
Section 29 Off-Street Parking and Loading Area Requirements for Non-Agricultural Uses ..... |19
Section 30 Recreational Vehicle (RV) Storage ..... | 24
Section 31 Renewable Energy, Individual ..... | 25
Section 32 Renewable Energy, Commercial/Industrial ..... | 27
Section 33 Second Dwelling Units ..... | 37
Section 34 Service Stations and Gas Stations ..... | 37
Section 35 Pipelines and Other Utility Corridors ..... | 38
Section 36 Railways ..... | 37
Section 37 Sour Gas Facilities ..... | 38
Section 38 Shipping Containers ..... | 39
Section 39 Shooting Range Standards and Location Criteria ..... | 41
Section 40 Signs ..... | 42
Section 41 Soft Shelled Buildings ..... | 45
Section 42 Work Camps ..... | 46
Section 43 Data Processing Operation ..... | 46
Section 44 Battery Energy Storage Systems ..... | 48

Schedule 6 **TELECOMMUNICATION SITING PROTOCOL** ..... SCHEDULE 6 | 1

Section 1 Applicability ..... | 1
Section 2 Municipal Review and Issuance of Concurrence or Non-Concurrence ..... | 2
Section 3 Development and Design Standards ..... | 2
Section 4 Application Submittal Requirements ..... | 4
Section 5 Notification and Public Consultation Process ..... | 4

APPENDIX A **FORMS AND FEES**

APPENDIX B **SUBDIVISION POLICIES**

APPENDIX C **PROCESS FLOWCHARTS**

APPENDIX D **AREA STRUCTURE PLAN GUIDELINES**

APPENDIX E **TECHNICAL STUDIES**

APPENDIX F **CONFINED FEEDING OPERATIONS**

APPENDIX G **POST & CABLE BARRICADE STANDARDS**

Section 27 Motor Sports Park ..... |18
Section 28 Natural Resource Extractive Uses ..... |18
Section 29 Off-Street Parking and Loading Area Requirements for Non-Agricultural Uses ..... |19
Section 30 Recreational Vehicle (RV) Storage ..... | 24
Section 31 Renewable Energy, Individual ..... | 25
Section 32 Renewable Energy, Commercial/Industrial ..... | 27
Section 33 Second Dwelling Units ..... | 36
Section 34 Service Stations and Gas Stations ..... | 37
Section 35 Pipelines and Other Utility Corridors ..... | 37
Section 36 Railways ..... | 37
Section 37 Sour Gas Facilities ..... | 38
Section 38 Shipping Containers ..... | 38
Section 39 Shooting Range Standards and Location Criteria ..... | 40
Section 40 Signs ..... | 42
Section 41 Soft Shelled Buildings ..... | 45
Section 42 Work Camps ..... | 45
Section 43 Data Processing Operation ..... | 46

Schedule 6 **TELECOMMUNICATION SITING PROTOCOL** ..... SCHEDULE 6 | 1

Section 1 Applicability ..... | 1
Section 2 Municipal Review and Issuance of Concurrence or Non-Concurrence ..... | 2
Section 3 Development and Design Standards ..... | 2
Section 4 Application Submittal Requirements ..... | 4
Section 5 Notification and Public Consultation Process ..... | 4

APPENDIX A **FORMS AND FEES**

APPENDIX B **SUBDIVISION POLICIES**

APPENDIX C **PROCESS FLOWCHARTS**

APPENDIX D **AREA STRUCTURE PLAN GUIDELINES**

APPENDIX E **TECHNICAL STUDIES**

APPENDIX F **CONFINED FEEDING OPERATIONS**

APPENDIX G **POST & CABLE BARRICADE STANDARDS**

VULCAN COUNTY

LAND USE BYLAW NO. 2020-028

ADMINISTRATION

General

SECTION 1 TITLE

1.1 This bylaw may be referred to or cited as the "Vulcan County Land Use Bylaw".

SECTION 2 SCOPE

2.1 No development shall hereafter be carried out within the boundaries of the municipality except in conformity with the provisions of this Bylaw.

SECTION 3 PURPOSE

3.1 The purpose of this Bylaw is to, amongst other things:

(a) divide the municipality into land use districts;

(b) prescribe and regulate the use(s) for each district;

(c) establish the role of approving authorities;

(d) establish a method for making decisions on applications for redesignations and development permits, including issuing development permits for a development;

(e) provide the manner in which notice of the issuance of a development permit is to be given; and

(f) implement the Municipal Development Plan and other statutory plans of the municipality, as may be developed.

SECTION 4 REPEAL OF FORMER BYLAW

4.1 The Vulcan County Land Use Bylaw No. 2010-010 and amendments thereto are hereby repealed.

SECTION 5 METRIC AND IMPERIAL MEASUREMENTS

5.1 All units of measure contained within this Bylaw are metric (SI) standards. Imperial measurements and conversions are provided for convenience and information only.

SECTION 6 DEFINITIONS

6.1 For "Administrative Definitions" refer to Section 66.

6.2 For "Use and Use Related Definitions" refer to Schedule 2.

SECTION 7 FORMS AND FEES

7.1 For the purposes of administering the provisions of this Bylaw, Council may authorize by separate resolution or bylaw, the preparation and use of such fee schedules and forms as it may deem necessary. Any such fee schedules and forms are deemed to have the full force and effect of this Bylaw in execution of the purpose for which they are designed, authorized and issued. Application forms are included in Appendix A.

7.2 The reduction, refund, or any matter related to application fees requires the approval of Council.

SECTION 8 COMPLIANCE WITH LEGISLATIVE AND BYLAW REQUIREMENTS

8.1 This Bylaw is enacted under Part 17 of the *Municipal Government Act*. This bylaw is to be read in conjunction with the *Alberta Land Stewardship Act* and the *South Saskatchewan Regional Plan*.

8.2 Notwithstanding that a development permit may not be required by this Bylaw, nothing in this Bylaw relieves a person or corporation of their duty or obligation to comply with the provisions and requirements of this Bylaw, or to obtain any other permit, license or other authorization required by the Government of Canada, the Province of Alberta, or any regulation pursuant to provincial or federal legislation, nor any bylaw of Vulcan County.

NOTE TO READER: *Where a reference to an applicable provincial, federal or other regulatory requirement is listed in this Bylaw, it is for the convenience of the reader only, and is not meant to be a comprehensive source for all applicable requirements. Further, where a reference to an applicable provincial, federal or other regulatory requirement is listed in a particular district or section, the absence of a similar reference for a different development is not intended to imply that an applicable requirement does not exist.*

8.3 Compliance with the provisions and requirements of this Bylaw does not exempt any person or corporation from complying with any easement, covenant, agreement or contract affecting the development.

8.4 For those developments requiring approval by provincial agencies, including but not limited to the Natural Resources Conservation Board, Alberta Energy Regulator, Alberta Utilities Commission, and where the provincial approval is paramount to a local approval (pursuant to sections 619 & 620 of the *MGA*) that may be required pursuant to this Bylaw, a local decision may be provided by the Development Authority prior to or after a decision by the relevant provincial agency (at the sole discretion of the Development Authority).

NOTE TO READER: *It is intended that all statutory plans will align with the Land Use Bylaw. However, where an inconsistency exists, the Development Authority's decision shall prevail, while considering all relevant plans, this Bylaw and the MGA.*

SECTION 9 SECTIONS FOUND TO BE INVALID

9.1 If one or more provisions of this Bylaw are, for any reason, declared to be invalid, all remaining provisions are to remain in full force and in effect.

SECTION 10 RULES OF INTERPRETATION

10.1 Unless otherwise required by the context, words used in the present tense include the future tense; words used in the singular include the plural; and the word person includes a corporation as well as an individual. The *Interpretation Act,* as amended, shall be used in the interpretation of this Bylaw. Words have the same meaning whether they are capitalized or not.

10.2 The written regulations of this Bylaw take precedence over any graphic or diagram if there is a perceived conflict.

10.3 The Land Use Districts Map takes precedence over any graphic or diagram in the district regulations if there is a perceived conflict.

10.4 Where a reference to another document or piece of legislation is made in this Bylaw, it is intended that the reference apply to include any amendments or a successor document or legislation that replaces the original.

SECTION 11 APPENDICES

11.1 Appendices A through G attached hereto, are for information purposes only, and may be amended from time to time as they do not form part of this Bylaw.

Approving Authorities

SECTION 12 DEVELOPMENT AUTHORITY

12.1 The Development Authority is established by separate bylaw pursuant to the *Municipal Government Act (MGA)* and for the purposes of this Bylaw.

12.2 Council shall be the Development Authority within any Direct Control District, unless specifically delegated to the Municipal Planning Commission, the Development Officer, or another designate(s) as stipulated in the particular Direct Control land use district.

12.3 In the absence of the Development Officer, the following are authorized to act in the capacity of Development Officer:

(a) Municipal Planning Commission;

(b) Chief Administrative Officer; or

(c) a designate(s) in accordance with the *MGA*.

12.4 The Development Officer is an authorized person in accordance with section 624 of the *MGA*.

12.5 The Development Authority shall perform such powers and duties as are specified:

(a) in the Vulcan County Municipal Planning Commission Bylaw;

(b) in this Bylaw;

(c) in the *MGA*; or

(d) where applicable, by resolution of Council.

NOTE TO READER: *The term "Development Authority," where used in this Bylaw, refers to either the Development Officer or the Municipal Planning Commission (as the case may be), depending on the classification of a "use" in a specific land use district or where Council has chosen to specifically authorize one entity or the other, or both. Where the Development Officer or the Municipal Planning Commission are specifically named, the relevant provision is meant to apply specifically to that individual entity.*

SECTION 13 SUBDIVISION AUTHORITY

13.1 The Subdivision Authority is authorized to make decisions on applications for subdivisions pursuant to the Subdivision Authority Bylaw, and may exercise only such powers and duties as are specified:

(a) in the Vulcan County Municipal Planning Commission Bylaw;

(b) in this Bylaw; or

(c) by resolution of Council.

13.2 The Subdivision Authority may delegate, through any of the methods described in Section 13.1 above, to any individual, municipal staff, or a regional services commission, any of its required functions or duties in the processing of subdivision applications. In respect of this:

(a) the delegation of duties by the Subdivision Authority may include the authorized entity being responsible for determining the completeness of a submitted subdivision application; and

(b) the Subdivision Authority delegate is authorized to carry out the application process with subdivision applicants as described in the Subdivision Rules and Procedures section of the Bylaw, including the task of sending all required notifications to applicants as stipulated.

SECTION 14 DEVELOPMENT OFFICER – POWERS AND DUTIES

14.1 The office of the Development Officer is hereby established and such office shall be filled by one or more persons as appointed by resolution of Council.

14.2 The Development Officer:

(a) shall receive and process all applications for development permits and determine whether a development permit application is complete in accordance with Section 32;

(b) shall maintain for the inspection of the public during office hours, a copy of this Bylaw and all amendments thereto and ensure that copies of the same are available for public purchase;

(c) shall also establish and maintain a register in which shall be recorded the application made for a development permit and the decision made on the application, and contain any such other information as the Municipal Planning Commission considers necessary;

(d) shall consider and decide on "permitted use" and "discretionary use – Development Officer" applications that comply with this Bylaw;

(e) shall refer to the Municipal Planning Commission, with recommendations, all development permit applications for which decision making authority has not been assigned to the Development Officer;

(f) may refer any development application to the Municipal Planning Commission for its review, comment or advice;

(g) shall refer all development applications in a Direct Control district to Council for a decision, unless Council has specifically delegated approval authority to the Development Officer or the Municipal Planning Commission;

(h) shall notify adjacent landowners and any persons who are likely to be affected by a proposed development in accordance with Section 43 of this Bylaw;

(i) shall receive, review, and refer any applications to amend this Bylaw to Council;

(j) shall issue the written notice of decision and/or development permit on all development permit applications and any other notices, decisions or orders in accordance with this Bylaw;

(k) may receive and consider and decide on first time requests for time extensions, up to one year, for Development Permits which the Development Officer or the Municipal Planning Commission has approved;

(l) shall provide a regular report to the Municipal Planning Commission summarizing the applications made for a development permit and the decision made on the applications, and any other information as the Municipal Planning Commission considers necessary; and

(m) shall perform any other powers and duties as are specified in this Bylaw, the Municipal Planning Commission Bylaw, the *MGA* or by resolution of Council.

SECTION 15 MUNICIPAL PLANNING COMMISSION – POWERS AND DUTIES

15.1 The Municipal Planning Commission may exercise only such powers and duties as are specified in the *MGA*, the Municipal Planning Commission Bylaw, this Bylaw, or by resolution of Council.

15.2 The Municipal Planning Commission shall be responsible for:

(a) considering and deciding upon development permit applications referred to it by the Development Officer;

(b) providing recommendations on planning and development matters referred to it by the Development Officer or Council;

(c) considering and deciding upon requests for time extensions on development permit applications referred to it by the Development Officer;

(d) considering and deciding upon applications for subdivision approval; and

(e) any other powers and duties as are specified in this Bylaw, the Municipal Planning Commission Bylaw, the *MGA* or by resolution of Council.

SECTION 16 COUNCIL

16.1 Council shall be responsible for considering development permit applications within any Direct Control district, except where the decision making authority has been delegated to the Municipal Planning Commission or the Development Officer.

SECTION 17 SUBDIVISION AND DEVELOPMENT APPEAL BOARD (SDAB)

17.1 The Subdivision and Development Appeal Board (SDAB) is established by separate bylaw pursuant to the *MGA*, and may exercise such powers and duties as are specified in this Bylaw, the *MGA* and the Subdivision and Development Appeal Board Bylaw.

Development and Subdivision in General

SECTION 18 LAND USE DISTRICTS

18.1 The County is divided into those land use districts as specified in Schedule 1 and shown on the Land Use Districts Maps found in Schedule 1.

18.2 The one or more uses of land or buildings that are:

(a) permitted uses in each district, with or without conditions; and/or

(b) discretionary uses in each district, with or without conditions;

are described in Schedule 2, Land Use District Regulations.

18.3 A land use that is not listed as a permitted or discretionary use but which is reasonably similar in character and purpose to a permitted or discretionary use in that district may be deemed a similar use by the Development Authority in accordance with Section 39.

18.4 A land use not listed as a permitted or discretionary use or not deemed a similar use, in a district is a prohibited use and shall be refused.

18.5 Each land use district contains the rules and policies regarding the subdivision of land and the reconfiguration of existing titles.

SECTION 19 SUITABILITY OF SITES

19.1 Notwithstanding that a use of land may be permitted or discretionary or considered similar in nature to a permitted or discretionary use in a land use district, the Development Authority may refuse to approve a subdivision or issue a development permit if the Development Authority is made aware of or if, in their opinion, the site of the proposed building or use is not safe or suitable based on the following:

(a) does not have safe legal and physical access to a maintained road in accordance with the Land Use Bylaw, other municipal requirements or those of Alberta Transportation if within 300 m (984 ft) of a provincial highway or 800 m (2,625 ft) from the centre point of an intersection of a controlled highway and a public road;

(b) has a high water table or soil conditions which make the site unsuitable for foundations and/or sewage disposal systems in accordance with provincial regulations;

(c) is situated on an unstable slope;

(d) consists of unconsolidated material unsuitable for building;

(e) is situated in an area which may be prone to flooding, subsidence or erosion;

(f) does not comply with the requirements of the *South Saskatchewan Regional Plan*, *Subdivision and Development Regulation* or any other applicable statutory plans;

(g) is situated over an active or abandoned coal mine or oil or gas well or pipeline that has not been sufficiently remediated;

(h) would expose the structure itself and/or people living and working there to risk from the operations of a nearby airport or airstrip;

(i) is unsafe due to contamination by previous land uses;

(j) does not meet the minimum setback requirements from a sour gas well or bulk ammonia storage facility;

(k) is situated closer to a confined feeding operation than the minimum distance separation recommended by the Natural Resources Conservation Board (for residential dwellings only, not including those owned by the confined feeding operation owner);

(l) does not have an adequate (quality or volume) water supply;

(m) does not have an adequate means of wastewater (i.e. sewage) disposal;

(n) does not have an adequate means of stormwater disposal;

(o) does not meet an applicable measurable standard (i.e. lot size or setback requirements) or any other applicable standards or requirements of this Bylaw;

(p) would prevent or interfere with the natural and economic extension of a nearby developed area including but not limited to an oil or gas field, a sewage treatment plant, a waste disposal or transfer site, a gravel pit, a pipeline or a road system;

(q) is subject to any easement, caveat, restrictive covenant or other registered encumbrance which makes it impossible to build on the site.

19.2 Nothing in this section shall prevent the Development Authority from issuing a development permit or approving a subdivision if the Development Authority is satisfied that there is no risk to persons or property or that these concerns will be met by appropriate engineering measures or other mitigating measures and approvals from provincial and/or federal agencies have been obtained, as applicable.

SECTION 20 NUMBER OF DWELLING UNITS ON A PARCEL

20.1 No person shall construct or locate or cause to be constructed or located more than one dwelling unit on a parcel unless authorized by the Development Authority through the issuance of a development permit and only where allowed in the land use district for which the application was made.

20.2 For the purpose of this section, if a parcel contained more than one dwelling unit on the date that this Bylaw was adopted, all the dwellings on that parcel are deemed to conform.

20.3 If a certificate of title describes a parcel containing two or more quarter sections or portions thereof, each one of the quarter sections will be considered a parcel for the purposes of the provisions under this section.

SECTION 21 NON-CONFORMING BUILDINGS AND USES

21.1 A non-conforming building or use may only be continued in accordance with the provisions outlined in section 643 of the *MGA*.

21.2 The Development Officer and the Municipal Planning Commission are authorized to exercise minor variance powers with respect to non-conforming buildings pursuant to section 643(5)(c) of the *MGA*.

SECTION 22 DEVELOPMENT ON NON-CONFORMING SIZED LOTS

22.1 Development on an existing registered non-conforming sized lot that does not meet the minimum requirements for lot length, width or area specified in the applicable land use district in Schedule 2 may be permitted at the discretion of the Development Authority.

22.2 The Development Officer is authorized to approve development on existing registered non-conforming sized lots for permitted uses where the Municipal Planning Commission issued a variance(s) to the minimum requirements for lot length, width and/or area as part of a subdivision approval.

SECTION 23 DEVELOPMENT AGREEMENTS

23.1 The Development Authority may require, with respect to a development that as a condition of issuing a development permit, the applicant enter into an agreement with the municipality, pursuant to section 650(1) of the *MGA*, to do any or all of the following:

(a) to construct or pay for the construction of a road required to give access to the development;

(b) to construct or pay for the construction of a pedestrian walkway system to serve the development and/or connect with existing or proposed pedestrian walkway systems that serves or is proposed to serve an adjacent development;

(c) to install or pay for the installation of public utilities, other than telecommunication systems or works, that are necessary to serve the development, whether or not the public utility is, or will be, located on the land that is the subject of the development;

(d) to construct or pay for the construction of off-street, or other parking facilities and/or loading and unloading facilities;

(e) to pay an off-site levy or redevelopment levy;

(f) to give security to ensure that the terms of the agreement under this section are carried out.

23.2 The Municipal Planning Commission may require, with respect to a subdivision that as a condition of issuing an approval for a subdivision, the applicant enter into an agreement with the municipality, pursuant to section 655(1)(b) of the *MGA*.

23.3 An agreement referred to in this section may require the applicant for a development permit or subdivision approval to oversize improvements in accordance with section 651 of the *MGA*.

23.4 The County may register a caveat under the *Land Titles Act* with respect to an agreement under this section against the certificate of title for the land that is the subject of the development, or for the parcel of land that is the subject of the subdivision.

23.5 If the County registers a caveat under this section, it must discharge the caveat when the agreement has been complied with.

SECTION 24 GUARANTEED SECURITY TRIGGERED BY DEVELOPMENT PERMITS

24.1 The Development Authority may require a guaranteed security upon evaluation of the scale and the type of a proposed development. The purpose of the guaranteed security is to ensure the completion of the development including any attached conditions. The security may take the form of a cash deposit or an irrevocable letter of credit.

24.2 The projected amount of the guaranteed security shall be estimated by the applicant/developer and shall be based on information provided in the development permit application. If, in the opinion of the Development Authority, the projected costs utilized by the applicant/developer to calculate the guaranteed security are inadequate, the Development Authority may establish a higher projected cost for the required work for the purposes of determining the acceptable amount of the required security. The Development Authority retains the right to stipulate the amount of the guaranteed security.

24.3 The County shall hold the guaranteed security, without interest payable, until the development permit has been completed, including any attached conditions, to the satisfaction of the Development Authority.

24.4 Once the development is complete and all conditions of the development permit have been met, to the satisfaction of the Development Authority, the guaranteed security will be released back to the applicant/developer within thirty (30) days from the date the Development Authority verifies completion.

24.5 In the event that the development, including any attached conditions, is not completed to the satisfaction of the Development Authority, in accordance with the terms of the development permit, the County is entitled to draw from the guaranteed security, sufficient funds to undertake the activities necessary to complete the outstanding items of the development. The County shall provide an accounting to the applicant/developer indicating how the proceeds of the security were applied within 60 days from the date of completion.

SECTION 25 MINIMUM DISTANCE SEPARATION CALCULATIONS

25.1 For the purpose of this Bylaw, unless specified otherwise, all minimum distance separation calculations that apply between residential uses and neighbouring Confined Feeding Operations shall be consistent with the processes and formulas established in the *Agricultural Operation Practices Act* and regulations thereto. Variances of the application of the minimum distance separation may be considered by the Development Authority with consideration for the applicable land use district, and/or the applicable subdivision criteria.

SECTION 26 ARCHITECTURAL CONTROLS

26.1 Some areas within the County may have architectural control guidelines in place for the construction of new buildings and other matters. Architectural control review of plans must be approved by the Developers' Architectural Control Approval Officer prior to the County accepting a development permit application as complete.

26.2 The Municipal Planning Commission may require, as a condition of subdivision approval:

(a) architectural control guidelines to be submitted for review and approval by the municipality prior to subsequently being registered on title; and

(b) may stipulate specific development standards, land or building restrictions to be applied or included in the covenants.

26.3 The County shall not be held responsible for private covenants with regard to the enforcement of any applicable architectural controls.

SECTION 27 MUNICIPAL APPROVAL FOR ENCROACHMENTS

27.1 A landowner or developer is required to obtain permission from the County for any improvement or structure that may be located over an easement or utility right-of-way in favour of the County or one of its utility agency designates.

27.2 In situations where a development may be exempt from obtaining a development permit, the landowner or developer is still required to obtain permission from the municipality for any improvement or structure that may be located over an easement or utility right-of-way in favour of the municipality or one of its utility agency designates. Notwithstanding that no permit may be required, the County may deny the placement of structures or improvements over an easement or right-of-way and may also order the removal or relocation of such.

27.3 The County may enter into an encroachment agreement for the encroachment of a building or structure onto a County owned parcel, pursuant to section 72 of the *Land Titles Act*, or onto a municipal road right-of-way, pursuant to section 651.2 of the *MGA*, where it is satisfied that the interest of the public will not be adversely affected.

SECTION 28 CERTIFICATE OF COMPLIANCE

28.1 A certificate of compliance letter respecting the categorization of a land use(s) (i.e. permitted or discretionary), building setbacks on a parcel of land, and consistency with an approved development permit(s), may be issued by the Development Officer upon receipt of a real property report, a complete application form and the applicable fee. The real property report must not be more than 12 months old. If older than 12 months, it must be accompanied with a statutory declaration stating that no new buildings or structures have been erected on the property.

Development Permit Rules and Procedures

SECTION 29 DEVELOPMENT PERMIT – WHEN REQUIRED

29.1 Except as otherwise provided for in Schedule 3 (Development Not Requiring a Development Permit), no development shall be commenced unless a development permit application has been approved, a development permit issued, and the development is in accordance with the terms and conditions of a development permit issued pursuant to this Bylaw.

29.2 In addition to meeting the requirements of this Bylaw, it is the responsibility of the applicant to ascertain, obtain and comply with all other approvals and licenses that may be required by other federal, provincial or municipal regulatory departments or agencies.

SECTION 30 DEVELOPMENT NOT REQUIRING A DEVELOPMENT PERMIT

30.1 For the list of uses and developments not requiring a development permit, see Schedule 3.

SECTION 31 DEVELOPMENT PERMIT APPLICATION

31.1 Except as provided in Section 30 and Schedule 3, no person shall commence a development unless issued a development permit in respect of the proposed development.

31.2 An application for a development permit shall be made by submitting to the Development Officer the following, which must be of a sufficient quality and content adequate (see Section 32.3 for more information) to properly evaluate the application:

(a) a completed development permit application, signed by the registered owner or authorized by the owner;

(b) the prescribed non-refundable application fee, as set by resolution of Council;

(c) a description of the existing and proposed use of the land, building(s) and/or structures and whether it is a new development, an alteration/addition, relocation or change of use and whether the use is temporary in nature;

(d) a description of the proposed method of providing necessary services including water and sewage disposal;

(e) a site plan acceptable to the Development Officer indicating:

  (i) the location of all existing and proposed buildings and structures and registered easements or rights-of-way, dimensioned to property lines and drawn to a satisfactory scale;

  (ii) the location of necessary services including a private sewage disposal system, water service (i.e. well, cistern, dugout), stormwater management areas, and bulk fuel storage;

  (iii) where applicable, the location of existing and proposed approaches, driveways, parking and loading areas, abutting streets, avenues and lanes, culverts and crossings, surface drainage patterns, and proposed municipal or private local improvements;

(f) drawings depicting the exterior elevations of a building and indicating height, horizontal dimensions, finishing materials and architectural features;

(g) a floor plan illustrating the use of rooms or spaces within buildings and structures;

(h) a parcel grading plan or storm water management plan;

(i) any additional information as may be stipulated in the general standards of development in Schedule 4 or the use-specific in Schedule 5;

(j) any such other information as may be required by the Development Authority to evaluate an application including but not limited to: conceptual schemes, landscaping plans, drainage plans, servicing and infrastructure plans, soil analysis, geotechnical reports, environmental site assessment, environmental impact assessment, and/or other reports regarding site suitability; Real Property Report; or a surveyors sketch;

(k) a statement of disclosure from the applicant regarding anticipated sequencing and phasing of a development;

(l) a statement of disclosure prepared by a qualified professional, licensed to practice in Alberta, if there are any known environmental contaminants existing on the site; and

(m) documentation from the Alberta Energy Regulator (AER) identifying the presence or absence of abandoned oil and gas wells as required by the *Subdivision and Development Regulation* and a professional plot plan of the proposed development if the presence of an abandoned well is found.

31.3 The Development Officer may determine that not all of the information listed in Section 31.2 is required, while having regard for the criteria in Section 32.3.

31.4 An application for a development permit must be made by the registered owner of the land on which the development is proposed. An application may be made by a person who is not the registered owner of the land only with written consent of the owner. The Development Officer may request a current title documenting ownership and copies of any registered encumbrance, lien or interest registered on title.

31.5 In the case of a development permit application made for a parcel of land within a Direct Control district, all requirements and procedures pertinent to the development permit application will be at the direction and to the satisfaction of Council.

SECTION 32 DETERMINATION OF COMPLETE DEVELOPMENT PERMIT APPLICATION

32.1 A Development Officer shall, within 20 days after the receipt of an application in accordance with Section 31 for a development permit, determine whether the application is complete.

32.2 The Development Officer may refer an application to the Municipal Planning Commission in order for the Municipal Planning Commission to determine if the application is complete.

32.3 An application is complete if, in the opinion of the Development Officer, the application contains the documents and other information necessary to review and make a decision on the application.

For the purposes of guidance on this section, "necessary to review" means sufficient information investigating and addressing the issues required to assess the suitability of a proposed land use, which includes but is not limited to: assessing land use impacts like odours, noise, glare, traffic generation; investigating environmental matters; addressing the type of servicing and appropriateness of the proposed method of servicing.

32.4 The time period referred to in Section 32.1 may be extended by an agreement in writing between the applicant and the Development Officer.

32.5 If the Development Officer does not make a determination referred to in Section 32.1 within the time required under Section 32.1 or 32.4, the application is deemed to be complete.

32.6 If a Development Officer determines that the application is complete, the Development Officer shall issue to the applicant a written Notice of Completeness acknowledging that the application is complete, delivered by hand, mail or electronic means.

32.7 The Notice of Completeness in Section 32.6 may be contained within a Notice of Receipt of an application under Section 43, or with a Notice of Decision under Section 44.

32.8 If the Development Officer determines that the application is incomplete, the Development Officer shall issue to the applicant a written notice indicating that the application is incomplete and specifying the outstanding documents and information to be provided. A submittal deadline for the outstanding documents and information shall be set out in the notice. A later date may be agreed on between the applicant and the Development Officer in writing to extend the deadline.

32.9 When the Development Officer determines that the information and documents required to be submitted under Section 32.8 are complete, the Development Officer shall issue to the applicant a written Notice of Completeness acknowledging that the application is complete, delivered by hand, mail or electronic means.

32.10 If the required documents and information under Section 32.8 have not been submitted to the Development Officer within the timeframe prescribed in the notice issued under Section 32.8, the Development Officer shall return the application to the applicant accompanied by a written Notice of Refusal stating the application is deemed refused and the reasons for refusal.

32.11 Despite issuance of a Notice of Completeness under Section 32.6 or 32.9, the Development Authority in the course of reviewing the application may request additional information or documentation from the applicant that the Development Authority considers necessary to review the application.

SECTION 33 PERMITTED USE APPLICATIONS

33.1 Upon receipt of a completed application for a development permit for a permitted use, the Development Officer shall approve an application for a permitted use where the proposed development conforms to this Bylaw, with or without conditions, and may require:

(a) the applicant to enter into a development agreement;

(b) the payment of any applicable off-site levy or redevelopment levy;

(c) access to be provided so the site will be legally and physically accessible to a developed municipal road or if within 300 m (984 ft) of a provincial highway will meet the requirements of Alberta Transportation;

(d) a geotechnical investigation to confirm that the site is suitable in terms of topography, soil characteristics, flooding, subsidence, erosion and treatment of sanitary sewage;

(e) an alteration of a structure or building size or location to ensure any setback requirements of this Land Use Bylaw or the *Subdivision and Development Regulation* can be met;

(f) any measures to ensure compliance with the requirements of this Land Use Bylaw or any other statutory plan adopted by the County;

(g) necessary easements and/or encroachment agreements;

(h) the provision of public utilities, other than telecommunications systems or works, and vehicular and pedestrian access;

(i) to provide security to ensure the terms of the permit approval under this section are carried out;

(j) repairs or reinstatement of original road condition of roads or approaches which have been damaged or destroyed or otherwise altered by development or construction activities upon the site;

(k) time periods stipulating completion of development;

(l) a lot and/or construction stakeout conducted by an approved surveyor or agent to ensure a building is situated as per an approved site plan;

(m) any measures to ensure compliance with applicable federal, provincial and/or other municipal legislation and approvals.

33.2 Where an application is for a permitted use in the land use district for which the parcel is designated, the application shall not be refused by the Development Authority on the basis of use alone.

33.3 Upon receipt of a completed application for a permitted use that requests a variance, as stipulated in Section 41.1, the Development Officer:

(a) may grant the variance if, in the opinion of the Development Officer, the variance would not unduly interfere with the amenities of the neighbourhood or materially interfere with or affect the use, enjoyment or value of neighbouring parcels of land; or

(b) may refer the development application involving a request for a limited variance to the Municipal Planning Commission for a decision;

(c) is not required to notify adjacent landowners or persons likely to be affected prior to issuance of a decision on a development permit granting a limited variance under this section.

33.4 Upon receipt of a completed application for a permitted use, the Development Officer may refer the application to the Municipal Planning Commission for a decision.

33.5 Where a use is listed as a permitted use, but is noted within the individual land use district or elsewhere in this Bylaw as being discretionary in a certain situation (i.e. timing relative to the establishment of another use, exceeding a certain size or threshold etc.), the use is discretionary.

SECTION 34 DISCRETIONARY USE APPLICATIONS

34.1 Upon receipt of a completed application for a development permit for a discretionary use for which the Municipal Planning Commission is authorized to decide upon, the Development Officer shall:

(a) notify adjacent landowners and other persons likely to be affected in accordance with Section 43; and

(b) refer the application to the Municipal Planning Commission for a decision.

34.2 Upon receipt of a completed application for a development permit for a discretionary use for which the Development Officer is authorized to decide upon, the Development Officer shall:

(a) notify adjacent landowners and other persons likely to be affected in accordance with Section 43; and

(b) make a decision on the application in accordance with Section 34.3 or refer the application to the Municipal Planning Commission for a decision.

34.3 When making a decision on a development permit for a discretionary use, the Development Authority must take into account:

(a) any statutory plans or non-statutory plans or studies affecting the parcel or type of development;

(b) the purpose statement in the applicable land use district;

(c) the appropriateness of the location and parcel for the proposed development;

(d) the land use compatibility and impact of the proposed development with respect to adjacent land uses and the greater community;

(e) the merits of the proposed development;

(f) access, transportation and servicing requirements.

34.4 After consideration of any response to the notifications of adjacent landowners and other persons likely to be affected, including government departments and referral agencies as applicable, compatibility and suitability of the proposed use, Section 34.3, and any other relevant matters, the applicable Development Authority may:

(a) approve a development permit with or without conditions, stating reasons; or

(b) refuse to approve the development permit, stating reasons.

34.5 The Development Authority may place any of the conditions stipulated in Section 33.1 on a development permit for a discretionary use in any land use district, in addition to any other conditions necessary to ensure the quality, suitability and compatibility of a development with other existing and approved uses in the area, or to achieve a logical land use planning objective.

34.6 The Development Authority may issue a development permit for a discretionary use granting approval of some portion, aspect or use of the proposed development, and refusing another portion, aspect or use of the proposed development, and shall provide reasons for the partial refusal.

SECTION 35 DEVELOPMENT PERMIT CONDITIONS

35.1 When a development permit is approved with conditions all "prior to release" conditions must be satisfied prior to the permit being released and becoming effective.

35.2 When a development permit is approved with conditions of an ongoing nature, those conditions must be satisfied in perpetuity.

SECTION 36 ADDITIONAL PLANNING REQUIREMENTS

36.1 A conceptual scheme may be required, at the discretion of the Municipal Planning Commission, prior to determining that an application for a discretionary use is complete (in accordance with Section 32.2), when in the opinion of the Municipal Planning Commission a development is not at its full build out stage.

36.2 The Municipal Planning Commission may require, as a condition of development permit, that the conceptual scheme forms part of the development permit and, if desired to be deviated from in the future, shall require a subsequent application for a development permit in order to approve the deviation, along with a revised conceptual scheme.

SECTION 37 DIRECT CONTROL DISTRICTS

37.1 Upon receipt of a completed application for a development permit in a Direct Control district, the Development Officer shall:

(a) refer the application to Council for a decision, except where the decision making authority has been delegated to the Municipal Planning Commission or the Development Officer; and

(b) notify adjacent landowners and other persons likely to be affected in accordance with Section 43.

37.2 After considering any response to notifications issued under Section 43, Council or the delegated decision making authority may:

(a) approve a development permit with or without conditions, stating reasons; or

(b) refuse to approve the development permit, stating reasons.

37.3 Where Council chooses to redistrict a parcel to Direct Control, it shall establish, within the particular Direct Control bylaw, site specific direct control information which may include standards and procedural direction.

SECTION 38 DEVELOPMENT PERMITS IN DIRECT CONTROL DISTRICTS

38.1 In accordance with section 641(4)(a) of the *MGA*, there is no opportunity to appeal an application for a development permit in a Direct Control district.

SECTION 39 SIMILAR USE

39.1 Upon receipt of an application for a development permit for a use that is not specifically defined in the Use Definitions in Schedule 2, but which may be similar in character and purpose to other uses of land and structures in the land use district in which such use is proposed, the Development Officer may classify the use as either similar to a permitted use or similar to a discretionary use.

39.2 Where a use has been classified similar to a permitted use, the Development Officer may process the application accordingly as a permitted use or refer the application to the Municipal Planning Commission for a decision. The notice of the decision shall be subject to Section 44.

39.3 Where a use has been classified similar to a discretionary use for which the Municipal Planning Commission is authorized to issue a decision, the Development Officer shall:

(a) notify adjacent landowners and other persons likely to be affected in accordance with Section 43; and

(b) refer the application to the Municipal Planning Commission for a decision.

39.4 Upon referral of an application by the Development Officer for a use that may be similar in character and purpose to a permitted or discretionary use, the Municipal Planning Commission:

(a) shall rule whether or not the proposed use is similar to a use in the land use district in which it is proposed by way of a typical development application merit review process (including referrals and presentations at a Municipal Planning Commission meeting) and corresponding decision;

(b) if the proposed use is deemed similar to a use in the land use district in which it is proposed, the application shall be processed as a discretionary use application;

(c) if the proposed use is not deemed similar to a use in the land use district in which it is proposed, the development permit shall be refused.

SECTION 40 TEMPORARY USE

40.1 Where a proposed development is for a discretionary use, the Development Authority may issue a temporary development permit for that development if any of the following apply:

(a) the proposed development is of a temporary nature;

(b) the Development Authority wishes to ensure the suitability or compatibility of a multi-phase project prior to allowing full build out of the project by only allowing one or more phases to commence;

(c) the Development Authority wishes to ensure that the development authorized by the permit will cease by a specified date or will not be ongoing indefinitely.

40.2 Temporary use applications shall be subject to the following conditions:

(a) the applicant or developer is liable for any costs involved in the cessation or removal of any development at the expiration of the established time period;

(b) the Development Authority may require the applicant to submit security guaranteeing the cessation or removal of the temporary use; and

(c) any other conditions as deemed necessary in accordance with Section 33.1.

40.3 A use deemed temporary in nature shall be processed in accordance with the corresponding Sections 33 and 34 of this Bylaw. Notification of adjacent landowners and other persons likely to be affected shall be in accordance with Section 43 of this Bylaw.

SECTION 41 APPLICATIONS REQUIRING A VARIANCE

41.1 The Development Officer may, in deciding upon an application for a permitted use, or a discretionary use – Development Officer, allow a minor variance:

(a) up to 10 percent of any one numeric standard of this Bylaw and/or;

(b) up to 50 percent of one yard requirement (front, rear or side) for existing development within the Rural General – RG Land Use District to bring development into compliance;

provided it is in accordance with the criteria in Section 41.3(a) and (b).

41.2 The Development Officer is authorized to exercise minor variance powers with respect to non-conforming buildings pursuant to Section 21.2 of this Bylaw and section 643(5)(c) of the *MGA*. The Development Officer may refer a matter respecting a non-conforming building to the Municipal Planning Commission for a decision.

41.3 The Municipal Planning Commission may approve or conditionally approve a permitted use referred to the Municipal Planning Commission pursuant to Section 33.4 or, a discretionary use that does not comply with this Bylaw if, in the opinion of the Municipal Planning Commission, the use complies with the following tests:

(a) the proposed development would not unduly interfere with the amenities of the neighbourhood, or materially interfere with or affect the use, enjoyment or value of neighbouring parcels; and

(b) the proposed development conforms with the use as defined in the land use bylaw.

NOTE TO READER: *The definition of a use cannot be waived (see Use Definitions). Meaning that the intended purpose of the use cannot be changed, and if a defined use is not listed in the particular land use district applicable to the land subject of the application, there is not ability to approve that use. A land use bylaw amendment would be required to either redesignate a parcel to a district that provides for the desired use, or, for a text amendment to add a particular use to the land use district.*

SECTION 42 LIMITATIONS ON VARIANCE PROVISIONS

42.1 In approving an application for a development permit with a variance to a Measurable Standard, the Development Authority shall have regard for the following:

(a) the general purpose and intent of the appropriate land use district; and

(b) a variance shall normally only be considered in cases of unnecessary hardship or practical difficulties particular to the use, character, or situation of land or building which are not, generally, common to other land in the same land use district.

SECTION 43 NOTIFICATION OF ADJACENT LANDOWNERS AND PERSONS LIKELY AFFECTED

43.1 Where notification of adjacent landowners and other persons likely to be affected is required, the Development Officer shall, at least 7 days before the meeting of the Municipal Planning Commission or the decision of the Development Officer:

(a) mail (postal service or electronic mail) or hand deliver written notice of the application to:

(i) adjacent landowners and other persons likely to be affected by the issuance of a development permit;

(ii) affected municipalities if, in the opinion of the Development Authority, the proposed development could have an impact upon land uses adjacent to the County boundary or if required by an applicable intermunicipal development plan;

(iii) any other persons, government departments, advisory committee, homeowner association or referral agency that is deemed to be affected; or

(b) publish a notice of the application in a newspaper circulating in the municipality where the application is located; or

(c) post a notice of the application in a conspicuous place on the property; or

(d) any combination of the above; and

(e) notwithstanding the above, the notice shall always be posted in a prominent place within the County Office, and on the official municipal website.

43.2 In all cases, notification shall:

(a) describe the nature and location of the proposed use or development;

(b) state the place and time where the Municipal Planning Commission will meet to consider the application; and

(c) state the process for the submission of written or oral comments on the application.

43.3 When considering applications for which notices have been served, the Development Authority may afford an opportunity to any interested person to make representation on the application and shall take into account any such representations made when giving final consideration to the said application.

43.4 The notification of immediately adjacent landowners is always required, while the notification of non-adjacent landowners and other persons is at the discretion of the Development Authority. In evaluating the extent of notification required for a particular development permit, the Development Officer shall use discretion (except where a specific notification standard is required in respect of a particular use or situation in this Bylaw) while aiming to notify all persons likely to be affected by a development.

SECTION 44 NOTICE OF DECISION FOR DEVELOPMENT PERMITS

44.1 **Permitted use permits (not requiring a variance)**:

Upon the issuance of a development permit for a permitted use that complies with this Bylaw, the Development Officer shall:

(a) provide a written notice of decision to the applicant in accordance with Section 44.4;

(b) post a copy of the decision in a prominent place in the County Office for at least 21 days; and

(c) publish a copy of the decision on the official municipal website.

44.2 **Permitted use permits involving a variance**:

Upon the decision on a development permit for a permitted use that involves a variance of a standard of this Bylaw, the Development Officer shall:

(a) provide a written notice of decision to the applicant in accordance with Section 44.4;

(b) post a copy of the decision in a prominent place in the County Office for at least 21 days;

(c) publish a copy of the decision on the official municipal website; and

(d) notify the persons and the referral agencies that were originally notified in accordance with Section 43.1 using the same method(s) that was originally used for the notification.

44.3 **Discretionary use permits**:

Upon the decision on a development permit for a discretionary use the Development Officer shall:

(a) provide a written notice of decision to the applicant in accordance with Section 44.4;

(b) post a copy of the decision in a prominent place in the County Office for at least 21 days;

(c) publish a copy of the decision on the official municipal website; and

(d) notify the persons and referral agencies that were originally notified in accordance with Section 43.1 using the same method(s) that was originally used for notification.

44.4 The Development Officer will give or send a copy of the written decision, which includes the date on which the decision was made, to the applicant on the same day the decision is made.

44.5 For the purposes of Section 44.4, the “date on which the decision was made” means:

(a) the date the Development Authority signs the notice of decision or development permit; or

(b) the date the decision is posted in the newspaper;

whichever occurs later.

SECTION 45 ESTABLISHMENT OF DEVELOPMENT

45.1 Despite the issuance of a development permit, no development is authorized to commence within 21 days after the date on which the decision was made.

45.2 If an appeal is made, no development is authorized pending the outcome of the appeal.

45.3 Any development occurring prior to the dates determined under Sections 45.1 and 45.2 is at the risk of the applicant.

45.4 Unless a development permit is suspended or cancelled, or if an alternative timeline is provided in the approval conditions of the development permit in accordance with Section 45.5, the development must be commenced and carried on with reasonable diligence in the opinion of the Development Authority within 12 months from the date of issuance of the permit, otherwise the permit is no longer valid.

45.5 The Development Authority may establish, as a condition of approval, that the development must be reasonably completed within a set period of time, not less than 24 months from the date of the approval.

45.6 A development permit must be carried out in accordance with approved plans and conditions of approval.

SECTION 46 FAILURE TO MAKE A DECISION – DEEMED REFUSED

46.1 In accordance with the *MGA*, an application for a development permit is, at the option of the applicant, deemed to be refused if the decision of the Development Authority is not made within 40 days of receipt of the completed application unless the applicant has entered into an agreement with the Development Authority to extend the 40-day period.

SECTION 47 DEVELOPMENT PERMIT VALIDITY & ONGOING USE

47.1 When an approved use that has the benefit of a development permit, has been discontinued for a period of 12 months or more, any development permit that may have been issued is no longer valid and said use may not be recommenced until a new application for a development permit has been made and a new development permit has been issued. This section does not apply to non-conforming uses which are regulated under section 643 of the MGA and Section 21 of this Bylaw.

47.2 A request to withdraw a development permit shall be made in writing to the Development Officer.

47.3 A development permit is valid only for the location for which it has been issued.

SECTION 48 DEVELOPMENT PERMIT EXTENSION

48.1 An application to extend the validity of a development permit may be made at any time prior to the expiration of the approved permit in accordance with Sections 47.1 and 48.5, except for a permit for a temporary use which shall not be extended.

48.2 Upon receipt of a request to extend the validity of a development permit, the validity of a development permit may be extended once, for up to a period of 12 months, by:

(a) the Development Officer if the permit was issued by the Development Officer or the Municipal Planning Commission;

(b) the Municipal Planning Commission if the permit was approved on appeal by the Subdivision and Development Appeal Board.

48.3 Notification of adjacent landowners and persons likely affected is not required for an extension request, or the decision on an extension request.

48.4 An extension request, where approved, must be granted “as is” with the original content of the development permit application and conditions of approval.

48.5 A development permit is valid only for the location for which it has been issued.

SECTION 49 CHANGES TO A DEVELOPMENT PERMIT

49.1 The Development Officer may accept minor, non-material modifications to an approved development permit. Where minor, non-material modifications are proposed and accepted by the Development Officer, revised drawings shall be submitted to the satisfaction of the Development Officer.

NOTE TO READER: *The allowance for post-approval minor, non-material modifications to a development permit is intended to improve the efficiency of the development process. Examples of potentially acceptable post-approval changes include the minor relocation of a building or a change of landscaping materials.*

49.2 Where, in the opinion of the Development Officer, a proposed post-approval change to a development permit exceeds the threshold described in 49.1, a new development permit shall be required to consider the change.

49.3 A new development permit to consider a change to an existing approved development permit shall be processed in the same way as the original development permit.

49.4 Where a new development permit proposing to change an existing approved development permit is approved, the new development permit shall supersede the original development permit to the extent that they deal with the same matter.

SECTION 50 TRANSFERABILITY OF DEVELOPMENT PERMIT

50.1 A valid development permit is transferable where the use remains unchanged and the development is affected only by a change of ownership, tenancy, or occupancy, of the land or building.

50.2 A transferred development permit is only valid with the prior written consent of the Development Authority.

50.3 A home occupation permit is non-transferable and is invalidated by a change of ownership, tenancy, or occupancy.

SECTION 51 REAPPLICATION FOR A DEVELOPMENT PERMIT

51.1 If an application for a development permit is refused by the Development Authority or, on appeal the Subdivision and Development Appeal Board, the submission of another application for a development permit on the same parcel of land for the same or for a similar use of the land may not be accepted by the Development Officer for at least six months after the date of refusal.

51.2 If an application was refused solely because it did not comply with the standards of this Bylaw or was refused as an incomplete application under Section 32.10, the Development Officer may accept another application on the same parcel of land for the same or similar use before the time period referred to in Section 51.1 has lapsed, provided the application has been modified to comply with this Bylaw.

SECTION 52 SUSPENSION OR CANCELLATION OF A PERMIT

52.1 If, after a development permit has been issued, the Development Authority determines that:

(a) the application contained a misrepresentation;

(b) facts were not disclosed which should have been at the time of consideration of the application for the development permit;

(c) the development permit was issued in error; or

(d) the applicant withdrew the application by way of written notice;

the Development Authority may suspend or cancel the development permit by giving notice in writing to the holder of it and stating the reasons for any suspension or cancellation.

52.2 Upon receipt of the written notification of suspension or cancellation, the applicant must cease all development and activities to which the development permit relates.

52.3 A person whose development permit is suspended or cancelled under this section may appeal within 21 days of the date the notice of cancellation or suspension is received to the Subdivision and Development Appeal Board.

52.4 If a development permit is suspended or cancelled, the Subdivision and Development Appeal Board shall review the application if an appeal is filed by the applicant and either:

(a) reinstate the development permit;

(b) cancel the development permit if the Development Authority would not have issued the development permit if the facts subsequently disclosed had been known during the consideration of the application; or

(c) reinstate the development permit and may impose such other conditions as are considered necessary to ensure that this Bylaw or any statutory plan is complied with.

Subdivision Rules and Procedures

SECTION 53 SUBDIVISION APPLICATIONS

53.1 An applicant applying for subdivision shall provide the required material and information as requested by the Subdivision Authority or its designate. A complete application shall consist of:

(a) an official application, in the manner and form prescribed, clearly and legibly completed with all the required information and signatures provided as requested on the form;

(b) the applicable fees paid;

(c) an up-to-date and current copy of the certificate of title to the subject land;

(d) a surveyor's sketch or tentative subdivision plan with dimensions, structures, location of private sewage disposal system, professionally prepared;

(e) provincial abandoned gas well information required by *Alberta Energy Regulator Directive 079*;

(f) for vacant parcels, a soils analysis which indicates the ability of the proposed parcel to be privately serviced, and/or a letter from a certified Private Sewage Disposal Systems installer;

(g) any such other information as may be required at the discretion of the Subdivision Authority in order to accurately evaluate the application and determine compliance with the Land Use Bylaw and other government regulations. This may include but is not limited to the provision of geotechnical information, soil analysis reports, water reports, soil or slope stability analysis, drainage information, contours and elevations of the land, engineering studies or reports, wetland reports, environmental impact assessments, utility and servicing information, and/or the preparation of a conceptual scheme or an area structure plan may be required from the applicant prior to a decision being rendered on a subdivision application to determine the suitability of the land for the proposed use; and

(h) the consent to authorize the Subdivision Authority or its designate to carry out a site inspection on the subject land as authorized in accordance with the *MGA* must also be provided on the submitted application form unless determined not to be needed by the Subdivision Authority.

53.2 In accordance with the *MGA*, the Subdivision Authority or those authorized to act on its behalf, shall provide notification to a subdivision applicant within the 20-day prescribed time period, on whether a submitted application is deemed complete, or if it is determined to be deficient what information is required to be submitted by a specified time period, by sending notification in the following manner:

(a) for an application deemed complete, the applicant shall be notified in writing as part of the formal subdivision application circulation referral letter;

(b) for an application determined to be incomplete, written notification shall be given to the applicant which may be in the form of a letter sent by regular mail to the applicant, or sent by electronic means, or both, or by any other method as may be agreed to between the applicant and Subdivision Authority;

(c) in respect of subsection (b) for a subdivision application determined to be incomplete, the applicant will be advised in writing as part of the Notice of Incompleteness what the outstanding or required information items are that must be submitted by the time specified in the notice.

53.3 Notwithstanding Section 53.2, the applicant and Subdivision Authority may agree and sign a time extension agreement in writing in accordance with section 653.1(3) of the *MGA* to extend the 20-day decision time period to determine whether the subdivision application and support information submitted is complete.

53.4 A determination made by the Subdivision Authority that an application is complete for processing does not preclude the ability for the Subdivision Authority to request other information or studies to be submitted by the applicant during the review and processing period, prior to a decision being rendered, or as condition of subdivision approval.

SECTION 54 INCOMPLETE SUBDIVISION APPLICATIONS

54.1 The Subdivision Authority may refuse to accept and process a subdivision application where the information required under Section 53 and/or as described in a Notification of Incompleteness has not been submitted, is determined to be deficient, is still incomplete, or in the opinion of the Subdivision Authority the quality of the material supplied is inadequate to properly evaluate the application.

54.2 If the Subdivision Authority determines that the application is refused due to incompleteness, the applicant shall be notified in writing with reasons in the manner as described in Section 53.2.

54.3 The notification provided for in Section 53.2(b) shall include for the applicant the required information on the filing of an appeal and to which appeal board body the appeal lies, either the local appeal board or provincial Municipal Government Board, in accordance with the parameters of the *MGA.*

SECTION 55 SUBDIVISION APPROVAL VALIDITY

55.1 Upon being satisfied that a plan of subdivision or other instrument complies with a subdivision approval and that any conditions have been met within 1 year from the date on which the subdivision application is approved, the Subdivision Authority must, in accordance with section 657 of the *MGA*, endorse the plan or other instrument.

55.2 The Municipal Planning Commission is hereby authorized to decide upon applications for subdivision approval endorsement extensions.

55.3 An application to extend the 1-year endorsement period of a subdivision approval may be made at any time to the Municipal Planning Commission.

55.4 An extension request must be denied or granted "as is" with the original content of the subdivision application and conditions of approval.

55.5 Where granted, an individual subdivision approval endorsement extension shall be for a period not exceeding 1 year and the total time from the date of the original approval shall not exceed 5 years.

Appeals and Enforcement

SECTION 56 APPEALS AND PROCEDURES

56.1 In accordance with the *MGA*, any person receiving a decision on a development permit or any other person affected by any order, decision or development permit made or issued by an approval authority, excluding one under Schedule 6 (Telecommunication Siting Protocol), may appeal to the Subdivision and Development Appeal Board or the provincial Land & Property Rights Tribunal, as the case may be within 21 days after the date on which the written decision is given.

56.2 Notwithstanding Section 56.1, no appeal lies in respect of the issuance of a development permit for a permitted use unless the provisions of this Bylaw were relaxed, varied or misinterpreted pursuant to section 685(3) of the *MGA.*

56.3 In accordance with the *MGA* and the procedures outlined, any land owner who applied for subdivision and was refused an approval or had conditions attached to the approval, may appeal the decision to the Subdivision and Development Appeal Board, or the provincial Land & Property Rights Tribunal, as the case may be. Adjacent or affected landowners have no right to appeal a subdivision under the *MGA*.

56.4 An appeal to the Subdivision and Development Appeal Board shall be commenced by serving a written notice of the appeal to the Subdivision and Development Appeal Board and shall be accompanied by the applicable fees.

56.5 The Subdivision and Development Appeal Board must hold an appeal hearing within 30 days of the receipt of a notice of appeal, and give its decision in writing together with reasons within 15 days after concluding the hearing, in accordance with the provision of the *MGA*.

56.6 Any decisions made by Council with respect to a Direct Control district are not subject to appeal to the Subdivision and Development Appeal Board pursuant to section 685(4) of the *MGA*.

SECTION 57 NOTICE OF VIOLATION

57.1 Where the Development Authority finds that a development or use of land or buildings is not in accordance with the *MGA*, the *Subdivision and Development Regulation*, a development permit or subdivision approval, or this Bylaw, the Development Officer may, prior to issuing a Stop Order, issue a notice of violation to the registered owner or the person in possession of the land or buildings or to the person responsible for the contravention.

57.2 Such notice shall state the following:

(a) nature of the violation;

(b) corrective measures required to comply; and

(c) time period within which such corrective measures must be performed.

SECTION 58 STOP ORDERS

58.1 As set forth in the *MGA*, the Development Authority is authorized to issue an Order under section 645 of the *MGA* if a development, land use or use of a building is not in accordance with the *MGA*, the *Subdivision and Development Regulation*, a development permit or subdivision approval, or this Bylaw.

58.2 A person who receives a Stop Order under Section 58.1 may appeal the order to the Subdivision and Development Appeal Board within 21 days after the date on which the order is made.

SECTION 59 ENFORCEMENT OF STOP ORDERS

59.1 Pursuant to section 646 of the *MGA*, if a person fails or refuses to comply with an order directed to the person under section 645 or an order of a Subdivision and Development Appeal Board under section 687, the designated officer may, in accordance with section 542, enter on the land or building and take any action necessary to carry out the order.

59.2 The County may register a caveat under the *Land Titles Act* in respect of an order referred to in Section 58.1 against the certificate of title for the land that is the subject of an order.

59.3 If a caveat is registered under Section 59.2, the County must discharge the caveat when the order has been complied with.

59.4 If compliance with a stop order is not voluntarily effected, the County may undertake legal action, including but not limited to, seeking injunctive relief from the Alberta Court of Queen's Bench pursuant to section 554 of the *MGA*. In accordance with section 553 of the *MGA*, the expenses and costs of carrying out an order under section 646 of the *MGA* may be added to the tax roll of the parcel of land.

SECTION 60 PENALTIES AND RIGHT OF ENTRY

60.1 Any person who contravenes any provision of this Bylaw is guilty of an offence in accordance with the applicable provincial legislation.

60.2 In accordance with section 542 of the *MGA*, a designated officer may, after giving reasonable notice to and obtaining consent from the owner or occupier of land upon which this Bylaw or *MGA* authorizes anything to be inspected, remedied or enforced or done by a municipality:

(a) enter on that land at a reasonable time and carry out inspection, enforcement, or action authorized or required by the enactment or bylaw;

(b) request anything to be produced to assist in the inspection, remedy, enforcement or action; and

(c) make copies of anything related to the inspection, remedy, enforcement or action.

60.3 If a person refuses to grant consent or refuses to produce anything to assist in the inspection, remedy, enforcement or action referred to in section 542 of the *MGA*, the municipality under the authority of section 543 of the *MGA* may obtain a court order.

Amendments

SECTION 61 AMENDMENTS TO THE LAND USE BYLAW

61.1 Subject to section 692 of the *MGA*, any Section or Part of this Bylaw may be amended in accordance with Section 61 of this Bylaw.

61.2 Any person may apply to amend this Bylaw by making an application using the application form provided in Appendix A for a site-specific or textual amendment and submitting it to the Development Officer for processing and referral to Council. For a site-specific amendment, a signed authorization of the registered owner(s) consenting to the application for amendment shall be required.

61.3 As part of the application referred to in Section 61.2, the applicant must provide the information required under Section 62 of this Bylaw.

61.4 A person making an application to amend this Bylaw for a purpose other than the clarification of an existing provision of this Bylaw shall be required to:

(a) pay the County an application fee as set by Council; and

(b) provide, in writing, authorization and the right of entry for the Development Authority to such lands or buildings as may be required for investigation of the proposed amendment.

61.5 Upon receipt of an application to amend, the Development Authority shall:

(a) initiate or carry out any necessary investigation or analysis of the problems involved in or related to the amendment;

(b) prepare a report for the Council on the proposed amendment; and

(c) submit a copy of the report and all supporting materials to Council.

61.6 If it appears that the proposed amendment is one which is applicable to and for the benefit of Vulcan County at large, or most of the persons affected in one area, or to the entire district, then Council may direct that the application fee be returned to the applicant.

61.7 The Municipal Planning Commission may, at any time on its own motion, present for the consideration of Council any proposed amendment to this Bylaw.

61.8 Council may, at any time, initiate an amendment to this Bylaw, but prior to first reading of any proposed amendment the proposal shall be referred to the Development Authority for their report and recommendations.

61.9 Proposed amendments to this Bylaw are subject to those requirements and procedures set out in the *MGA* regarding enactment of bylaws, section 692 specifically.

61.10 Where an application for an amendment to this Bylaw has been refused by Council, another application that is the same or similar in nature shall not be accepted until at least 6 months after the date of refusal.

61.11 Where an application has been significantly changed, Council my accept an application prior to the end of the 6-month period specified in subsection 61.10.

SECTION 62 LAND USE REDESIGNATION APPLICATION REQUIREMENTS

62.1 A request for redesignation from one land use district to another shall be accompanied by the following information:

(a) a completed application form and fee;

(b) a narrative describing the:

(i) proposed designation and future use(s);

(ii) consistency with the Municipal Development Plan and applicable statutory plans;

(iii) consistency with the *South Saskatchewan Regional Plan* and any applicable provincial legislation or policies (i.e. *Water Act*, *Wetland Policy,* etc.);

(iv) compatibility of the proposal with surrounding uses and zoning;

(v) the suitability of the site, including identification of any constraints and/or hazard areas, (i.e. easements, soil conditions, topography, drainage, etc.);

(vi) availability of facilities and services (sewage disposal, domestic water, gas, electricity, fire and police protection, schools, etc.) to serve the subject property; and

(vii) access considerations including potential impacts on public roads;

(c) a diagram containing the following information prepared by a professional:

(i) the dimensioned development potential of the site, including proposed location of structures, access point, and any constraints and/or hazard areas (i.e. easements, soil conditions, topography, drainage, etc.) and a conceptual subdivision design;

(ii) proposed location of facilities and services (sewage disposal, domestic water, gas, electricity) to serve the subject property dimensioned to property lines and structures;

(d) a report prepared by a certified Private Sewage Disposal System (PSDS) installer or another qualified consultant that includes:

(i) a drawing that shows:

- locations of springs, dugouts or well accessing ground water
- location of proposed system

- locations of test pit or bore hole
- location and size of the PSDS reserve system (if any);

(ii) documentation identifying soil characteristics and results of laboratory soil texture classification;

(iii) comments on the ability of a proposed system to be sited on the property and maintain required clearance distances;

(e) an evaluation of surface drainage which may include adjacent properties; and

(f) any other information deemed necessary by Council to properly evaluate the application and to understand the impacts and/or merits of the application.

62.2 Council may determine that some or all of the information under Section 62.1 is not necessary to be submitted with an application.

62.3 A determination that a redesignation application is complete by the Development Authority does not preclude the ability of Council to request additional information or studies to be submitted during the review and processing period, prior to a public hearing being held and closed.

SECTION 63 AREA STRUCTURE PLAN REQUIREMENT

63.1 An area structure plan may be required to be prepared, at the discretion of Council, in conjunction with a redesignation application or on its own, when any of the following apply (see Appendices C and D for more information):

(a) more than four lots are proposed or could be created;

(b) the development is of a size, intensity, location, or any combination of the three, that warrants the benefit of a plan prepared pursuant to sections 633, 636 and 692 of the *MGA*;

(c) if otherwise required by Council.

SECTION 64 DECISIONS ON AMENDMENTS TO THE LAND USE BYLAW

64.1 After considering the application and its supporting information, and representations made at the public hearing, and having regard for the *South Saskatchewan Regional Plan*, Municipal Development Plan, any other applicable statutory plan and this Bylaw, Council may, in accordance with section 230(5) of the *MGA*:

(a) pass the proposed bylaw as is;

(b) amend the proposed bylaw, without the need for further advertising or hearing, and then pass it;

(c) refer the proposed bylaw back to administration for further review and/or changes, and reschedule the application for further consideration;

(d) amend the proposed bylaw and then refuse it;

(e) refuse the proposed bylaw as is.

SECTION 65 LAND USE REDESIGNATION REAPPLICATION

65.1 Where an application for an amendment to this Bylaw has been defeated by Council, another application that is the same or similar in nature may not be accepted until at least six months after the date of defeat, unless Council applies its discretion in accordance with Section 65.2

65.2 Council, at its sole discretion, may accept another application for an amendment to the Land Use Bylaw on a bylaw that was defeated, prior to the six months described in Section 65.1, if the applicant applies in writing to Council and describes how the circumstances or proposal has changed to address Council's concerns on defeat of the previous bylaw, and Council is of the opinion the revised application may be accepted.

SECTION 66 RESCINDING LAND USE REDESIGNATIONS AMENDING BYLAWS

66.1 Council, at its sole discretion, may rescind an amending bylaw which has redesignated certain lands within the municipality to accommodate a specific proposed subdivision and/or development. Council may rescind the said redesignation bylaw and rezone (redesignate) the lands back to their original designation if:

(a) the proposed subdivision has not been applied for, decided upon or extended; and/or

(b) the proposed development has not been applied for, decided upon, commenced or extended; and

(c) Council is satisfied that, to the best of their determination, the developer has no intentions to proceed with the proposal that was the purpose of applying for the redesignation application,

within 36 months of the redesignation bylaw being given third and final reading.

66.2 The rescinding of the redesignation bylaw shall be undertaken in accordance with section 191 of the *MGA.*

ADMINISTRATIVE DEFINITIONS

ADMINISTRATIVE DEFINITIONS

SECTION 67 ADMINISTRATIVE DEFINITIONS

The following definitions shall apply to the entire bylaw.

A

ABUTTING means to have a common boundary; to border on.

ACCESS, CONGRUENT LEGAL AND PHYSICAL means access to a parcel of land has both legal and physical access at the same location.

ACCESS, LEGAL means the right vested in an owner of a parcel of land the ability, opportunity, permission, or right to enter or pass to and from the land, without interference or obstruction. Legal access may be achieved directly for lands that abut a road or highway or by an access easement which allows one or more persons to access or use or travel across another's land to reach one or more parcels of land.

ACCESS, LEGAL AND PHYSICAL means a parcel of land abuts a road or highway or an access easement has been granted and that the legal access is developed, constructed or improved so that vehicles or persons can freely enter and exit the parcel.

ACCESS, PHYSICAL means a driveway, approach or other method of immediate ingress and egress, developed, constructed or improved so that vehicles or persons can go and return to a parcel(s) of land. Physical access may be achieved directly for lands that abuts a road by way of an approach from a developed and maintained municipal road or a highway.

ADDITION means construction that increases the footprint of an existing building or structure on a parcel of land. Typically, there will be a common connection from the existing building to the addition.

ADJACENT LAND OR ADJACENT means land that is contiguous to a parcel of land proposed for development, subdivision or redesignation and includes land that would be contiguous if not for a road, railway, walkway, water body, utility lot, right-of-way, reserve land or other similar feature.

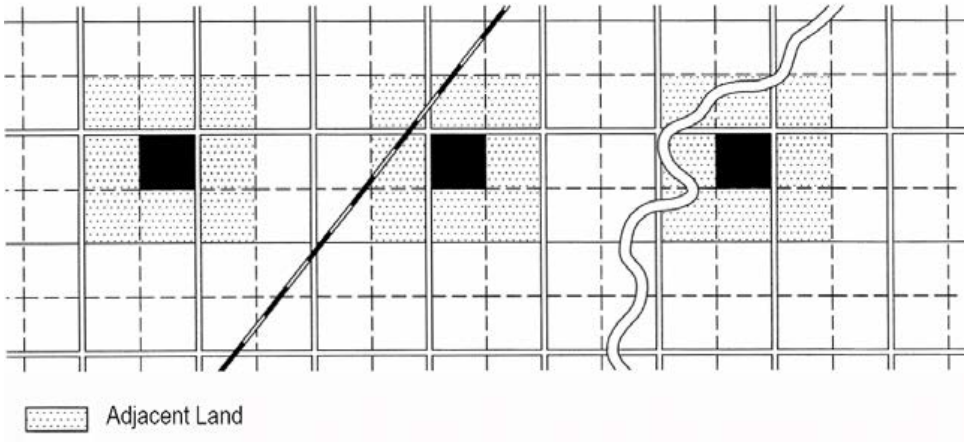

ALTERATION means any structural change to a building that results in an increase or decrease in the area or the volume of the building; any change in the area frontage, depth, or width of a lot that affects the required yard, landscaped open space, or parking requirements of this Bylaw; structural change to a sign; and to discontinue or change the principal use of the site or building with a use defined as being distinct from the discontinued use.

AMENITY AREA means an area(s) within the boundaries of a development intended for recreational or leisure purposes. These may include landscaped areas, patios, balconies, swimming pools, beaches, and other similar items that are intended for public use.

APPLICANT means the registered owner of the land or his or her representative or agent certified as such.

APPROVED USE means a use of land and/or building for which a development permit has been issued by the Development Authority or the Subdivision and Development Appeal Board.

ARCHITECTURAL CONTROLS means a set of development guidelines or standards that have been established by the developer and registered on a certificate of title for the purpose of creating and maintaining a higher quality of development/construction than is the norm for a particular subdivision and/or development project. Standards normally address, but are not limited to, design diversity, square footage, roof slopes and materials, building cladding, landscaping, accessory buildings, setbacks, driveway materials and other appealing neighbourhood aesthetics and may also address building lot restrictions, special setbacks and lot grading.

AREA, BUILDABLE means the space created on a lot or parcel within which a building may be constructed once the setback requirements for a specific zoning district, and any site-specific limitations, have been considered. The portion of a lot remaining after all undevelopable areas, setbacks from property boundaries and other development constraints, and minimum yard dimensions have been deducted. The area on a lot that will accommodate the proposed development of a building. Also referred to as "building envelope."

AREA, FLOOR means the greatest horizontal area of a building above grade within the outside surface of exterior walls or within the glassline of exterior walls and the centerline of fire walls but not including the floor areas of basements, unfinished attics, passageways of a building, cellars, attached garages and open porches. All dimensions shall be outside dimensions.

AREA, LOT means the total area of a lot. Also called "gross area."

AREA REDEVELOPMENT PLAN means a statutory plan, prepared in accordance with sections 634 and 635 of the *MGA* for the purpose of all or any of the following:

(a) preserving or improving land and buildings in the area;
(b) rehabilitating buildings in the area;
(c) removing buildings from the area;
(d) constructing or replacing buildings in the area;
(e) establishing, improving or relocating public roadways, public utilities or other services in the area;
(f) any other development in the area.

AREA STRUCTURE PLAN means a statutory plan prepared for the purpose of providing a framework for subsequent subdivision and development of an area of land (*MGA*, section 633) and that may be adopted by a Council by bylaw.

AS REQUIRED BY THE DEVELOPMENT AUTHORITY means that a standard or requirement of the Land Use Bylaw may be established or varied by the Development Officer or the Municipal Planning Commission, as the case may be, dependent on which entity has jurisdiction.

AS REQUIRED BY THE DEVELOPMENT OFFICER means that a standard or requirement of the Land Use Bylaw may be established or varied by the Development Officer.

AS REQUIRED BY THE MUNICIPAL PLANNING COMMISSION means that a standard or requirement of the Land Use Bylaw may be established or varied by the Municipal Planning Commission.

B

BALCONY means a platform, attached to and projecting from the face of a principal building with or without a supporting structure above the first storey, normally surrounded by a baluster railing and used as an outdoor porch or sundeck with access only from within the building.

BARELAND CONDOMINIUM means a condominium in which the units are defined in relation to the land rather than in relation to a structure, created specifically through subdivision and registered as a condominium plan in accordance with the *Condominium Property Act*.

BARELAND CONDOMINIUM UNIT means a bareland unit as defined in the *Condominium Property Act*.

BASEMENT means the portion of a building or structure, which is partially or wholly below grade.

BED AND SHORE OF A WATER BODY means the land covered so long by water as to wrest it from vegetation or as to mark a distinct character on the vegetation where it extends into the water or on the soil itself.

BERM means a barrier, typically constructed of mounded earth, used to separate incompatible areas, uses, or functions, or to protect a site or development from noise. Furthermore, the Development Authority may require the berm to be landscaped.

BOULEVARD means that portion of a public road right-of-way that lies between a curb and the boundary of a lot or parcel.

BRID means the Bow River Irrigation District.

BUFFER means the systematic and careful planting of vegetation, placed to provide visual screening and/or physical separation between uses, buildings, sites or areas that the Development Authority has determined to be incompatible. If deemed necessary, the Development Authority may require a berm as part of the buffer.

BUILDING includes anything constructed or placed on, in, over or under land, but does not include a highway or road or a bridge that forms part of a highway or road (*MGA*, section 616a.1).

BUILDING CONVERSION means the adaptation of a building from the occupancy it was originally designed for to another occupancy.

BUILDING HEIGHT means the vertical distance between the grade and the highest point of a building, excluding elevator housing, a roof stairway entrance, a ventilating fan, a skylight, a steeple, a chimney, a smoke stack, a fire wall or a parapet wall and a flagpole or similar device not structurally essential to the building.

BUILDING INSPECTOR means the person or persons hired to be the chief building inspector or building inspectors in and for Vulcan County.

BUILDING PERMIT means a certificate or document issued by the Safety Codes Officer pursuant to provincial legislation authorizing commencement of construction.

BUILDING SETBACK means the shortest distance between the exterior foundation wall of the building and the nearest lot line. Depending on the zoning district, the minimum setback will vary.

BUILDING WIDTH, MINIMUM means the minimum horizontal distance of the building's living space measured parallel to the shortest exterior wall of the building and perpendicular to the longest exterior wall of the building and excludes porches, decks, patios, balconies, carports, garages, unheated storage space, porte-cochere and other similar architectural features.

BYLAW means the current Land Use Bylaw of the Vulcan County.

C

CERTIFICATE OF COMPLIANCE means a document signed by the Development Authority, certifying that a development complies with this Bylaw with respect to yard requirements and insofar as represented on an Alberta Land Surveyors' Real Property Report.

CHANGE OF USE means the conversion of land or building, or portion thereof from one land use activity to another in accordance with the Permitted or Discretionary Uses as listed in each land use district.

COMMON WALL means a vertical separation completely dividing a portion of a building from the remainder of the building and creating in effect a building which, from its roof to its lowest level, is separate and complete unto itself for its intended purpose, such wall being owned by one party but jointly used by two parties, one or both of whom is entitled to such use by prior arrangement.

COMMUNITY CONSULTATION means the process and its documented information gathered from the public to record their opinion on development applications.

CONCEPTUAL SCHEME means a detailed site layout plan for a parcel of land and which describes the following elements:

(a) the location of all existing and proposed buildings;
(b) the location of all existing and proposed uses;
(c) the anticipated relationship between the proposed development with the surrounding area;
(d) the potential effect of the proposed development on the surrounding area;
(e) the proposed layout of all access roads, interior roads, utility services, easements, landscaping and other amenities, parking, and fencing;
(f) desired future development/phases until the project reaches its full build out stage;
(g) any other elements deemed necessary for approval, to the satisfaction of the Development Authority.

A comprehensive conceptual scheme shall be accompanied by a written overview which shall include an evaluation of impacts on adjacent land uses and how any impacts will be mitigated.

CONDOMINIUM means a building or structure where there exists a type of ownership of individual units, generally in a multi-unit development or project where the owner possesses an interest as a tenant in common with other owners in accordance with the provisions of the *Condominium Property Act*.

CONDOMINIUM PLAN means a plan of survey registered at a Land Titles Office prepared in accordance with the provisions of the *Condominium Property Act*, *Revised Statutes of Alberta 2000, Chapter C-22*.

CONTIGUOUS means the development of areas immediately adjacent to one another without intervening vacant land or undevelopable lands.

CORNER VISIBILITY OR CLEAR SIGHT TRIANGLES means a triangular area on a corner lot that comprises two sides which are measured from the intersection corner for a distance specified in this Bylaw. The third side of the triangle is a line joining the ends of the other two sides. Where the lot lines at intersections have rounded corners, the lot lines will be extended in a straight line to a point of intersection.

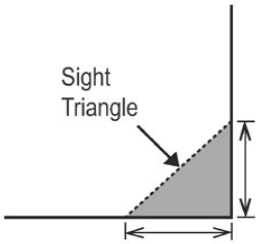

COUNCIL means Council of Vulcan County.

COUNTY means Vulcan County, either as a whole, with reference to its geographic extent, or as corporate body, including its administration and elected Council.

CRITICAL WILDLIFE ZONE means an area which is essential to a significant number of individuals of a species during at least part of the year. This can include, for example, wintering areas for ungulates, nesting or staging areas for waterfowl, colony sites for colonial nesters, and over-wintering areas for upland birds.

CUMULATIVE EFFECT means the resulting combined impacts of past, present and reasonably foreseeable future actions on the landscape. They are the total effect, both direct and indirect impacts, to any resource, ecosystem or human community no matter who has taken the action.

CUT-OFF PARCEL means a parcel of land that is separated from the remainder of the quarter section by:

(a) a permanent irrigation canal;
(b) a watercourse;
(c) a railway;
(d) a graded public roadway or highway;
(e) an embankment.

The affected parcel must be cut off in such a way that it is impractical to operate as part of an agricultural operation.

D

DATA PROCESSING OPERATION means a heavily industrial facility consisting of a building or a group of buildings housing powerful highly specialized computers that are used to verify digital transactions and require 24/7 climate control. This use may include an on-site power plant. Data processing includes data storage, crypto mining, and other similar uses.

DECK means an uncovered or covered horizontal structure off the first storey floor level of a building and intended for use as a private outdoor amenity space.

DEMOLITION means the pulling down, tearing down or razing of a building or structure.

DEVELOPED RESIDENCE means a legal dwelling (with a development permit) that is both habitable (defined by Alberta Health) and structurally sound (defined by the Alberta Building Code).

DEVELOPED RESIDENTIAL SITE means a parcel of land that includes the following:

(a) a legally approved dwelling;

(b) developed legal access;

(c) the provision of a reliable supply of potable water;

(d) a functional sewage disposal system;

(e) electrical utilities available to the site; and

(f) may include natural gas utilities available to the site.

DEVELOPER means a person or an owner of land who wishes to alter the title to the property and change the use of the property from its existing use.

DEVELOPMENT has the same meaning as section 616(b) of the *MGA* which defines development in the following way:

(a) an excavation or stockpile and the creation of either but does not include turning over soil with no immediate activity on the land in the near future;

(b) a building or an addition to, or replacement or repair of a building and the construction or placing of any of them in, on, over or under land;

(c) a change of use, or a building, or an act done in relation to land or a building that results in, or is likely to result in, a change in the use of the land or building; or

(d) a change in the intensity of use of land or a building or an act done in relation to land or a building that results in, or is likely to result in, a change in the intensity of use of the land.

DEVELOPMENT AGREEMENT means a contractual agreement completed between the municipality and an applicant or developer, which specifies the services and infrastructure that are to be provided by the applicant or developer as a condition of development approval. The agreement must be in accordance with sections 648, 650, 654 and 655 of the *MGA*. As directed by section 650(2) or sections 655(2) of the *MGA*, the County may register a development agreement as a caveat on the title for the parcel of land to which the agreement applies.

DEVELOPMENT AUTHORITY means the Municipal Planning Commission or the Development Officer, as provided for within this Bylaw.

DEVELOPMENT COMMENCEMENT means the instigation of physical, on the ground activities required to carry out a development permit, evidencing appreciable intent to complete the development in accordance with an approved development permit.

DEVELOPMENT OFFICER means a person authorized by Council to act as a Development Authority, as directed by section 624(2) of the *MGA* and in accordance with the municipality's Municipal Planning Commission Bylaw.

DEVELOPMENT PERMIT means a document that is approved under this Land Use Bylaw by the Development Authority, and authorizes development on a parcel as directed by the permit.

DEVELOPMENT STANDARDS are regulations prescribed in this Bylaw governing the manner in which development is to be effected, including the scale, placement, spacing and quality of development. Development standards that can be accurately measured are often referred to as "dimensional standards" or "measurable standards."

DESIGN GUIDELINES refer to policies established and adopted by Council, separate from this Bylaw, that prescribe technical requirements respecting the design, construction and maintenance of roads, infrastructure, and other matters.

DISCONTINUED means the time at which, in the opinion of the Approving Authority, substantial construction activity has stopped, or a non-conforming use or conforming use has ceased.

DISTRICT means an area of land use zoning established under Schedule 2 and the Land Use Districts Maps in this Land Use Bylaw.

DOMESTIC PET means an animal that is kept for domestic purposes. A domestic pet may include the following: cat, dog, ferret, gerbil, guinea pig, hamster, rabbit, iguana or small non-poisonous amphibians, reptiles, caged birds, and other similar animals typically sold in pet stores and kept as pets. The Development Authority may include other animals as domestic pets on a case-by-case basis after due consideration of the potential impact on neighbouring property and residents.

E

EASEMENT means a right held by one party on land owned by another (a dominant and servient tenement), typically for access thereto or to accommodate a utility over the parcel, and is typically registered on title.

EAVE means the overhang or extension of a roof line beyond the vertical wall of a building.

EFFLUENT means the liquid discharged from any on-site wastewater treatment system component.

EMBANKMENT means an earth bank constructed so that it is raised above the immediately surrounding land, with the specific purpose to redirect water or prevent flooding by a river, lake, canal, or other water body, or to carry a road, railway, or canal across a low-lying area.

ENVIRONMENTAL ASSESSMENT, IMPACT (EIA) means a comprehensive report professionally prepared by a qualified professional (i.e. engineer, biologist) assessing the impacts a proposed development may have on the environment, as well as the mitigation measures that can be taken to minimize these impacts.

ENVIRONMENTAL ASSESSMENT, SITE (ESA) means a comprehensive report professionally prepared by a qualified professional (i.e. engineer, biologist) to determine the environmental condition of a property and its suitability to support development. This includes a Phase 1 ESA, Phase 2 ESA or a Phase 3 ESA.

ENVIRONMENTALLY SIGNIFICANT AREA means

(a) areas identified in the Environmentally Significant Areas of Vulcan County 1988 Cottonwood Consultants Study;

(b) areas which perform a vital environmental, ecological or hydrological function such as aquifer recharge;

(c) areas which contain a unique geological or physiographic features;

(d) areas which contain significant, rare or endangered species;

(e) areas which are unique habitats with limited representation in the region or a small remnant of once large habitats which have virtually disappeared;

(f) areas which contain large and relatively undisturbed habitats and provide shelter habitat for species which are intolerant of human disturbance;

(g) areas which contain plants, animals, or landforms which are unusual or of regional, provincial or national significance; and

(h) areas which provide an important linking function and permit the movement of wildlife over considerable distance.

ENVIRONMENTAL RESERVE means any parcel of land specified as environmental reserve by the Subdivision Authority (*MGA*, section 664) and designated in a certificate of title in the name of Vulcan County.

ENVIRONMENTAL RESERVE EASEMENT means any parcel of land specified as environmental reserve by the Subdivision Authority (*MGA*, section 664) where the ownership of land stays with the landowner but an easement is registered in favour of Vulcan County.

EXCAVATION means the process of altering the natural elevation of the ground by grading, cutting, stripping, filling or breaking of ground, but does not include common household gardening and ground care, excavation made for the building of basements, structures, landscaping, or parking for which a development permit has been issued, or extensive agriculture. Gravel pit, mineral extraction and any other similar extractive use are not classified as excavation and are a separate use.

EXCLUSIVE USE AREA means an area not exceeding 140 m^2, pursuant to the *Condominium Property Act* and the *Planning Exemption Regulation* respectively, leased to a person for his or her sole use and exclusive possession.

EXISTING PARCEL means a parcel of land in Vulcan County. A parcel of land is defined in the *MGA* (section 616) as follows: the aggregate of the one or more areas of land described in a certificate of title or described in a certificate of title by reference to a plan filed or registered in a Land Titles Office. Where the lot size for a certain use is listed as "existing parcels," it is meant that this parcel is not eligible for subdivision.

EXOTIC ANIMALS means an introduced, alien, non-indigenous, or non-native animal, which has arrived by human activity, either deliberate or accidental. Examples of exotic animals in the County may include, but are not limited to, llamas, alpacas, ostriches, and other non-native species that may be owned and maintained as part of an agricultural operation.

F

FARM HELP means a person(s) who is engaged in an agricultural operation on agricultural lands.

FARMSTEAD means a part of a parcel:

(a) that is presently or was formerly used as the site for a dwelling as part of an agricultural operation;

(b) that typically includes agricultural buildings such as quonsets, grain bins, sheds, and ancillary structures such as corrals, dugouts, storage areas for farm machinery, equipment and products;

(c) that is relatively compact and well defined by topography, shelterbelts or other physical characteristics;

(d) that does not include any cultivated farmland, pasture land or lands unsuitable for agricultural production unless included within the shelter belt and/or physically defined area. Fencing alone shall not constitute a physically defined area if it encompasses agricultural land or other lands that are not necessary for habitation, unless it is proven to be impractical to do so.

FENCE means a vertical physical barrier constructed to prevent visual intrusions, unauthorized access, to confine or exclude livestock, to private sound abatement, or to delineate property lines.

FIRE PROTECTION includes fire detection, prevention and suppression.

FLOOD, DESIGN refers to the water level reached in a flooding event that has a defined chance (i.e. 1%) of being equalled or exceeded in any year, as determined in accordance with the technical criteria established by Alberta Environment and Parks.

FLOOD FRINGE refers to the portion of the flood hazard area outside of the floodway. Water in the flood fringe is generally shallower and flows more slowly than in the floodway. Where allowed, new development in the flood fringe should be floodproofed.

FLOOD HAZARD AREA is the area of land that will be flooded during a design flood, as determined by Alberta Environment and Parks or Vulcan County. The flood hazard area is divided into two zones: floodway and flood fringe.

FLOOD INUNDATION MAPS show areas at risk for different sized floods, including ice jam floods in some communities. These maps also identify areas that could be flooded if local berms fail, and are typically used for emergency response planning and to inform local infrastructure design. In flood hazard studies that have been completed since the 2013 Alberta floods, as many as 13 scenarios have been modelled for a specific community, spanning the 1:2 flood to the 1:1000 flood.

FLOODWAY means the inner portion of a flood risk area where the risk of flood is greatest and floodwaters are the deepest, fastest, and most destructive. The floodway typically includes the main channel of a stream as well as the adjacent overbank area necessary to effectively convey floodwaters. New development in the floodway is prohibited.

FLOOR AREA means the sum of the gross horizontal area of the floors and passageways of a building.

FLOOR AREA, LIVABLE means the heated floor area of a building, measured from the outside dimensions of the exterior walls, used for dwelling purposes, and excluding all non-dwelling areas such as attics, carports, and attached garages. Developed basements may be included in this calculation.

FLOOR AREA, MINIMUM means a required amount of livable floor area within a dwelling.

FOOTPRINT means the shape of the building/structure where it sits on the parcel. If an outline of the building could be drawn on the ground where it sits and then the building removed, the footprint is the shape that was drawn around the building. Changing the footprint of the building means adding to it or removing from it in such a way that this outline would be altered.

FOUNDATION means the supporting base structure of a building which has been designed and engineered to support the associated weight of the building or structure.

FRONTAGE means the length of a roadway boundary measured along the front parcel line. On double fronting lots all sides of a parcel adjacent to roadways shall be considered frontage.

FULL BUILD OUT STAGE means the point at where a development, as conceived and disclosed by the developer in keeping with the carrying capacity of the land and the limitations in the applicable land use district, has reached its final outcome/stage to the extent known at the time of disclosure. The ability or intention to develop an accessory building(s) or use(s) shall not normally elicit an interpretation that a development has not reached its full build out stage.

G

GEOTECHNICAL REPORT means a report prepared by a qualified and registered professional with the Association of Professional Engineers and Geoscientists of Alberta (APEGA) summarizing a comprehensive subsurface investigation of a parcel. All geotechnical reports should contain certain basic essential information, including:

(a) summary of all subsurface exploration data, including subsurface soil profile, exploration logs, laboratory or in situ test results, and ground water information;

(b) interpretation and analysis of the subsurface data;
(c) specific engineering recommendations for design;
(d) discussion of conditions for solution of anticipated problems; and
(e) recommended geotechnical special provisions.

GRADE, BUILDING (as applied to the determination of building height) means the average level of finished ground adjoining the main front wall of a building (not including an attached garage), except that localized depressions such as for vehicle or pedestrian entrances need not be considered in the determination of average levels of finished ground.

H

HAMLET means a rural settlement, generally too small to be incorporated as a Village, which has been designated as a Hamlet by the County. From the *MGA*, section 59(2), an unincorporated community may be designated a hamlet if the community:

(a) consists of five or more buildings used as dwellings, a majority of which are on parcels of land smaller than 1850 m^2 (0.5 acre) (20,000 ft^2);
(b) has generally accepted boundary and name; and
(c) contains parcels of land that are used for non-residential purposes.

HIGHWAY means a public road that is designated as a provincial highway and is under provincial jurisdiction. Within the County, such highways include the following: Highway 23, 24, 522, 529, 531, 533, 534, 542, 548, 804, 842 and 845.

HOLDING TANK means a tank designed to retain wastewater or effluent until transferred into mobile equipment for treatment offsite.

HOMEOWNERS' ASSOCIATION means a non-profit organization that requires membership for residential property owners in a specific development area, that secures its membership fees by a caveat or encumbrance on each residential property title and that is established for the purpose of:

(a) managing and maintaining the common property, facilities and amenities of the development area for the benefit of the residents of the development area;
(b) enhancing the quality of life for residents of the development area or enhancing the programs, public facilities or services provided to the residents of the development area; or
(c) providing non-profit sporting, educational, social, recreational or other activities to the residents of the development area.

L

LAGOON means a man-made pond for the storage, treatment, and stabilization of wastewater or effluent.

LAND CAPABILITY refers to the ability of the land to support a given land use, based on an evaluation of the physical, chemical and biological characteristics of the land, including topography, drainage, hydrology, soils and vegetation.

LAND-LOCKED PARCEL means a parcel does not have a means of physical access.

LANDSCAPING means creating a desired condition on a parcel of land by combining introduced plants with existing site features and/or introduced elements such as fences, walls, berms, paths, and other similar features. Landscaping is often required as a condition of a development permit to improve the quality of the site.

LAND USE DISTRICTS are specifically delineated planning areas within Vulcan County. Regulations prescribed in this Bylaw govern the use of land within the districts, as well as provide minimum standards for development through stipulations pertaining to the scale, placement, spacing and quality of buildings and structures. All land use districts referred to in this Bylaw are shown on the Land Use Districts Map found in Schedule 1 of this Bylaw.

LANE or LANEWAY means a public thoroughfare, which provides a secondary means of access to a lot or lots.

LICENSED AIRSTRIP means land licensed as an airstrip as determined by the appropriate federal department.

LOT in accordance with the *MGA*, means:

(a) a quarter section;

(b) a river lot shown on an official plan, as defined in the *Surveys Act*, that is filed or lodged in a Land Titles Office;

(c) a settlement lot shown on an official plan as defined in the *Surveys Act*, that is filed or lodged in a Land Titles Office;

(d) a part of a parcel where the boundaries of the parcel are separately described in the certificate of title other than by reference to a legal subdivision; or

(e) a part of a parcel of land described in a certificate of title if the boundaries of the part are described in a certificate of title by reference to a plan of subdivision.

LOT, CORNER means a lot located at the intersection of two or more streets.

LOT FRONTAGE means the front lot line or that side of a lot abutting a public roadway, but does not include any side abutting a lane, unless said lane is the only means of physical access to a lot.

LOT, INTERIOR means a lot situated between two lots or another lot and a lane and having access to not more than one street.

LOT LENGTH means the horizontal distance between the front and the rear lot lines measured along the median between the side lot lines.

LOT LINE means a legally defined boundary of any lot. The term property line and boundary line have the corresponding meaning.

LOT WIDTH means the horizontal distance between the side lot lines measured at a point perpendicular to the front property line.

M

MAINTENANCE means the upkeep of a building or property that does not involve structural change, the change of use, or the change in intensity of use.

MAJORVILLE GUIDELINES means the Majorville Guidelines for Land and Resource Management document prepared by the Government of Alberta under the auspices of the *South Saskatchewan Regional Plan*.

MAY is a discretionary term, providing notification that the regulation in question can be enforced if the County chooses to do so, and is usually dependent on the particular circumstances of the specific parcel and application.

MEASURABLE STANDARD means a dimensional standard stipulated in the current Land Use Bylaw.

MOTOR VEHICLE means a motor vehicle that, at the point of its original manufacture, meets the definition as defined in the *Traffic Safety Act*.

MOTOR VEHICLE, UNREGISTERED AND/OR INOPERATIVE means a motor vehicle as defined by this Bylaw that is either not registered through the *Traffic Safety Act* or is inoperative, or both. For the purposes of this definition, inoperative means the motor vehicle cannot be used in its present condition for the purpose for which it was manufactured.

MUNICIPAL DEVELOPMENT PLAN means a statutory plan, formerly known as a General Municipal Plan, adopted by Bylaw (*MGA*, section 632).

MUNICIPAL GOVERNMENT ACT (*MGA*) means the *Municipal Government Act*, *Revised Statutes of Alberta, 2000, Chapter M-26*.

MUNICIPAL HISTORIC RESOURCE means a heritage resource, together with any land in or on which it is located, designated by Council as a Municipal Historic Resource by bylaw, whose preservation is considered to be in the public interest.

MUNICIPAL PLANNING COMMISSION (MPC) means the committee authorized by Council to act as the Subdivision Authority pursuant to section 623 of the *MGA* and Development Authority pursuant to section 624 of the *MGA*, and in accordance with the Municipal Planning Commission Bylaw.

MUNICIPAL/SCHOOL RESERVE means the land specified to be municipal and school reserve by a subdivision approving authority (*MGA*, section 666).

MUNICIPAL SERVICING INSTALLATIONS means the installation of municipal services such as, water and sewer, roads, storm water drainage facilities, parks, and fire protection.

N

NOISE EXPOSURE FORECAST means a system which provides a measurement of the actual and forecasted aircraft noise near airports. This system factors in the subjective reactions of the human ear to the specific aircraft noise stimulus: loudness, frequency, duration, time of occurrence and tone.

NOISE IMPACT ASSESSMENT means an evaluation prepared by a qualified professional which measures noise and noise impacts.

NON-COMPLIANCE means a development constructed, or use undertaken after the adoption of the current Land Use Bylaw and does not comply with the current Land Use Bylaw.

NON-CONFORMING BUILDING means a building:

(a) that is lawfully constructed or lawfully under construction at the date of a Land Use Bylaw or any amendment thereof affecting the building or land on which the building is situated becomes effective; and

(b) that on the date the Land Use Bylaw or any amendment thereof becomes effective does not, or when constructed will not, comply with the Land Use Bylaw. [*MGA*, Part 17, section 616(q)]

NON-CONFORMING USE means a lawful specific use:

(a) being made of land or a building or intended to be made of a building lawfully under construction, at the date of a Land Use Bylaw or any amendment thereof affecting the land or building becomes effective; and

(b) that on the date the Land Use Bylaw or any amendment thereof becomes effective does not, or in the case of a building under construction, will not comply with the Land Use Bylaw. [*MGA*, Part 17, section 616(r)].

NON-SERVICED means in respect to a lot or parcel that neither a municipal water system nor a municipal sewage system services it.

NUISANCE means anything that is obnoxious, offensive or interferes with the use or enjoyment of property, endangers personal health and safety, or is offensive to the senses. This could include that which creates or is liable to create a nuisance through emission of noise, smoke, dust, odour, heat, light, fumes, vibration, fire or explosive hazard; results in the unsightly or unsafe storage of goods, salvage, junk, waster or other material; or poses a hazard to health and safety.

O

OFF-SITE LEVY means the rate established by a separate bylaw of Council (*MGA*, section 648(1)) that will be imposed upon owners and/or developers who are increasing the use of utility services, traffic services, and other services directly attributable to the changes that are proposed to the personal property. The revenues from the off-site levies will be collected by the municipality and used to offset the future capital costs for expanding utility services, transportation network, and other services that have to be expanded in order to service the needs that are proposed for the change in use of the property.

OFF-STREET LOADING SPACE means an open area, typically located in the rear yard space, designed expressly for the parking of haulage vehicles while loading or unloading.

OFF-STREET PARKING means a lot or portion thereof, excluding a public roadway which is used or intended to be used as a parking area for motor vehicles.

OFF-STREET PARKING SPACE means an off-street area available for the parking of one motor vehicle. Every off-street parking space shall be accessible from a street, lane or other public roadway.

ON-SITE WASTEWATER TREATMENT SYSTEM means a system for the management and/or treatment of wastewater at or near the development that generates the wastewater, including that portion of the building sewer, including the final soil-based effluent dispersal and treatment system but does not include the plumbing building drain from the development, which ends 1 m (3.25 ft) outside a building.

ORIENTATION means the arranging or facing of a building or other structure with respect to the points of the compass.

OWNER means:

(a) in the case of land owned by the Crown in right of Alberta or the Crown in right of Canada, the Minister of the Crown having the administration of the land; or

(b) in the case of any other land:

(i) the purchase of the fee simple estate in the land under an agreement for sale that is the subject of a caveat registered against the certificate of title in the land, and any assignee of the purchaser's interest that is the subject of a caveat registered against the certificate of title; or

(ii) in the absence of a person described in paragraph (i), the person registered under the *Land Titles Act* as the owner of the fee simple estate in the land;

(c) the person shown as the owner of land on the assessment roll.

P

PACKAGED SEWAGE TREATMENT PLANT means a manufactured unit that is used to substantially improve the effluent quality beyond the quality of effluent expected of a septic tank.

PARCEL means the aggregate of the one or more areas of land described in a certificate of title or described in a certificate of title by reference to a plan filed or registered in a Land Titles Office (*MGA*, section 616(s)).

PARTIALLY SERVICED LOT means a lot that is provided water or sewer serviced by either:

(a) a municipal water line or a municipal sewer line; or

(b) an incorporated organization or co-operative, recognized by the municipality, that is operating a provincially approved water or sewer system.

PATIO means an outdoor area with an uncovered horizontal structure with a surface height no greater than 0.61 m (2 ft) above grade and intended for use as a private outdoor amenity space.

PLAN OF SUBDIVISION means a plan of survey prepared in accordance with the relevant provisions of the *Land Titles Act* for the purpose of effecting a subdivision.

PLANNER OR PLANNING ADVISOR means the person or organization retained by Vulcan County to provide land use planning-related advice and services.

PLANNING EXEMPTION REGULATION means *Alberta Regulation 223/2000* or its successor.

PRINCIPAL BUILDING means a building which:

(a) occupies the major or central portion of a lot;

(b) is the chief or main building on a lot; or

(c) constitutes, by reason of its use, the primary purpose for which the lot is used.

PRINCIPAL USE means the primary purpose for which a lot, parcel, or building is used or intended to be used in the opinion of the Development Authority.

PRIOR TO RELEASE means a provision where a development permit condition must be completed prior to a development permit becoming effective.

PRIVATE SEWAGE DISPOSAL SYSTEM means the whole or any part of a system for the management, treatment and disposal of sewage on the site where the sewage is generated, but does not include anything excluded by the regulations.

PRIVATE SEWAGE INSTALLER means a person who holds a private sewage installer certificate of competency issued pursuant to the *Safety Codes Act*.

PROHIBITED USE means one or more uses of land or buildings that are either described in a land use district as prohibited uses or are not listed as either permitted or discretionary uses and are not deemed to be similar in nature to either a permitted or discretionary use within a particular land use district.

PROPERTY LINE means any boundary of a parcel.

PROPERTY LINE, FRONT means the property line adjacent to:

(a) the public roadway other than a lane, and, in the case of more than one property line adjacent to the public roadway, the front property line shall be the side that gains access to the property; and

(b) the internal subdivision road when the parcel abuts an internal subdivision road.

PROPERTY LINE, REAR means the property line furthest from opposite the front property line.

PROPERTY LINE, SIDE means a property line other than a front or rear property line.

PROVINCIAL OR FEDERAL REGULATION AUTHORITY means any provincial or federal regulatory body which may have guidelines, permit requirements, and/or restrictions on land and/or development.

PUBLIC ACCESS means a parcel of land, easement, or other method that is used by the public to enter or exit a parcel, subdivision or other feature.

PUBLIC OPEN SPACE means land, which is not in private ownership and is open to use by the public.

Q

QUALIFIED PROFESSIONAL means a professional educated in their field of practice or study and whom can demonstrate appropriate knowledge, expertise and abilities and one who practices the principle of professional accountability (architect, landscape architect, land use planner, municipal planner, biologist, civil engineer, geotechnical engineer, municipal engineer, Alberta Land Surveyor, agrologist, geoscientist, hydrologist). A qualified professional can be described as an expert with specialized knowledge in the field which one is practicing professionally and practices a high standard of professional ethics, behaviour and work activities while carrying out one's profession.

QUARTER SECTION means a titled parcel of land approximately 64.8 ha (160 acres) in size and originally established by the Dominion Land Survey.

QUARTER SECTION, UNSUBDIVIDED means a titled area of 64.8 ha (160 acres) more or less and originally established by the Dominion Land Survey, but excluding road widening, previous subdivision for school sites and other public uses.

R

REAL PROPERTY REPORT (RPR) means a legal document that illustrates in detail the location of all relevant, visible public and private improvements relative to property boundaries prepared by a registered Alberta Land Surveyor.

REGIONALLY SIGNIFICANT AREA means a public park, designated historic or archaeological site, environmentally sensitive area, forest reserve or any similar facility owned and/or administered by any level of government, including provincial highways.

RESIDUAL LOT means the portion of a parcel which is not the primary objective of a subdivision and will be the remainder area of the original title once a subdivision has occurred.

RIGHT-OF-WAY means an area of land not on a lot that is dedicated for public or private use to accommodate a transportation system and necessary public utility infrastructure (including but not limited to water lines, sewer lines, power lines, and gas lines).

RIPARIAN AREAS are vegetative and wildlife areas strongly influenced by water that occur adjacent to streams, shorelines and wetlands which are delineated by the existence of plant species normally found near freshwater.

ROAD means land:

(a) established as a statutory roadway that may or may not have been constructed to the municipality's standard and which may or may not be maintained for public transport;

(b) shown as a road on a plan of survey that has been filed or registered in a Land Titles Office that may or may not have been constructed to the municipality's standard and which may or may not be maintained for public transport;

(c) used as a public road, and includes a bridge forming part of a public road and any structure incidental to a public road.

S

SAFETY CODES means a code, regulations, standard, or body of rules regulating things such as building, electrical systems, elevating devices, gas systems, plumbing or private sewage disposal systems, pressure equipment, fire protection systems and equipment, barrier free design and access in accordance with the *Safety Codes Act*.

SCREENING means a fence, earth berm, hedge or trees used to visually and/or physically separate areas or functions.

SEASONAL means a term as defined by the Development Authority and typically not exceeding six months in a calendar year.

SECURITY means a cash deposit or an irrevocable letter of credit provided by a developer to ensure the conditions of a development agreement, subdivision condition or development permit condition are carried out to the satisfaction of the Development Authority.

SEPTIC TANK means a tank or chamber(s) within a tank used to provide primary treatment of wastewater through the process of settling and floating of solids and in which digestion of the accumulated sludge occurs.

SERVICE ROAD means a road located adjacent to a provincial highway or local road, which is intended to provide access to one or more subdivided parcels.

SERVICED means a parcel or a lot that is or will be connected to a municipal water system and municipal sewage system.

SETBACK means the minimum distance required between a property line of a lot and the nearest part of any building, structure, development, excavation or use on the lot, with the exception of grazing, and is measured at a right angle to the lot line.

SHALL means that an action is mandatory.

SHELTERBELT means one or more rows of trees or shrubs planted for the purpose of providing protection from wind and preventing the erosion of soils.

SHOULD means that an action is recommended but not mandatory.

SIMILAR USE means a use of land or building(s) for a purpose that is not provided in any district designated in this Bylaw, but is deemed by the Development Authority to be similar in character and purpose to another use of land or buildings that is included within the list of uses prescribed for that district.

SITE means that part of a parcel or a group of parcels on which a development exists or which an application for a development permit is being made.

SITE COVERAGE means the percentage of the lot area which is covered by all buildings and structures on the lot.

SITE COVERAGE, ACCESSORY means the percentage of the lot area which is covered by the combined area of all accessory buildings and structures and includes uncovered decks.

SITE COVERAGE, PRINCIPAL means the percentage of the lot area which is covered by the principal building including any structure attached to the principal building by an open or enclosed roofed structure, including but not limited to attached garages, carports, verandas, covered balconies, covered decks, and porches.

SITE PLAN means a plan drawn to scale illustrating the proposed and existing development prepared in accordance with the requirements of this Bylaw.

SLOPE-ADAPTIVE DEVELOPMENT refers to development effected on hillsides and other comparably steep lands that is planned and designed in accordance with the existing terrain to achieve compatibility with the physical environment.

SOIL HORIZON means a layer of soil or soil material approximately parallel to the land surface; it differs from adjacent genetically related layers in properties such as colour, structure, texture, consistence, and chemical, biological, and mineralogical composition.

SOUTH SASKATCHEWAN REGIONAL PLAN means the regional plan and regulations established by order of the Lieutenant Governor in Council pursuant to the *Alberta Land Stewardship Act*.

STATUTORY PLAN means a Municipal Development Plan (MDP), Intermunicipal Development Plan (IMDP), Area Structure Plan (ASP) or Area Redevelopment Plan (ARP) prepared and adopted pursuant to the requirements of the *MGA.*

STICK BUILT BUILDINGS means structures or buildings that are built on site with one piece of lumber at a time.

STOCKPILE means the temporary storage of materials on or off a hard surface including but not limited to soil, manure, forage or feed crops, or machinery.

STOP ORDER means an order issued by the Development Authority pursuant to section 645 of the *MGA*.

STOREY means the space between the top of any floor and the top of the next floor above it and if there is no floor above it, the portion between the top of the floor and the ceiling above it, but does not include a basement.

STORM WATER means water discharged from a surface as a result of rainfall or melting snowfall.

STRUCTURE means anything constructed or erected with a fixed location on the ground or attached to something having a fixed location on the ground. Among other things, structures include buildings, walls, fences, billboards and poster panels.

SUBDIVISION means the division of a parcel by an instrument that creates separate titles according to the *MGA, Part 17, Division 7*. Subdivide has a corresponding meaning.

SUBDIVISION AND DEVELOPMENT APPEAL BOARD means an appeal board established by Council pursuant to Section 627 of the MGA, or the provincial Land & Property Rights Tribunal, as the case may be.

SUBDIVISION AND DEVELOPMENT REGULATION means regulations established by order of the Lieutenant Governor in Council pursuant to section 694 of the *MGA* that governs the subdivision application process. The Regulation itemizes what subdivision applications must contain, where subdivision applications must be referred to, the timelines for a decision on subdivision applications and what factors must be considered when making a decision on subdivision applications. The Regulation also includes conditions and setback requirements for subdivision and development permit applications from sour gas facilities, gas and oil wells, abandoned wells, wastewater treatment facilities, landfills or waste sites and highways.

SUBDIVISION APPROVAL means the approval of a subdivision by the Subdivision Authority.

SUBDIVISION AUTHORITY means the body established by bylaw to act as the subdivision authority (*MGA*, section 623).

SUBSIDENCE means a localized downward settling or sinking of a land surface, whether caused by natural processes such as geological faulting or by human-induced activities such as groundwater depletion or subsurface mining.

SUCH AS means includes, but is not limited to the list of items provided.

SURFACE, HARD means an asphalt or concrete surface or other similar surface approved by the Development Authority but excludes rocks, gravel and dirt.

SURFACE, IMPERMEABLE means a surface that is not porous and does not allow fluids to pass through the surface.

SURFACE, PERMEABLE means a surface that is porous and will allow fluids to filtrate through the surface.

T

TEMPORARY DEVELOPMENT means a development for which a development permit has been issued for a limited time period as established by the Development Authority, or as set out in this Bylaw.

TREATMENT FIELD means a system of effluent dispersal and treatment by distributing effluent within trenches containing void spaces that are covered with soil and includes conventional, chamber system, gravel substitute, and raised treatment fields.

TREATMENT MOUND means a system where the effluent is distributed onto a sand layer and is built above grade to overcome limits imposed by depth to seasonally saturated soil or bedrock, or by highly permeable or impermeable soils.

U

URBAN MUNICIPALITY means the area of a city, town or village, defined by a specified boundary.

USE means the purposes for which land or a building is arranged or intended, or for which either land, a building or a structure is, or may be, occupied and maintained.

USE, DISCRETIONARY means those uses as prescribed in Schedule 2 of this Bylaw for which a development permit may be issued with or without conditions by the Development Authority at its discretion upon application having been made to the Development Authority if the proposed use conforms to this Bylaw. Since the merit of these uses may vary depending on location and other mitigating circumstances, permit applications must be reviewed by the Municipal Planning Commission, or, in certain instances, the Development Officer.

USE, EXISTING means a use that was in existence prior to the passing of this Bylaw.

USE, PERMITTED means those uses as prescribed in Schedule 2 of this Bylaw for which a development permit shall be issued with or without conditions by the Development Authority provided the use complies with any applicable standards. All Permitted Uses require the issuance of a development permit, unless exempted under this Bylaw.

V

VIEWSCAPE means the area visible from a point, line, arc, or specific locality that is of scenic or historic value deemed by Council to be in the broader public interest worthy of preservation.

W

WAIVER means the relaxation or variance of a development standard as established in this Bylaw.

WASTE MANAGEMENT TRANSFER STATION means a facility for the collection and temporary holding of solid waste in a transferable storage container.

WASTEWATER TREATMENT PLANT has the same meaning as referred to in the *Subdivision and Development Regulation* and as in the *Environmental Protection and Enhancement Act*. This definition also includes a wastewater treatment stabilization plant.

WATER BODY means any location where water flows or is present, whether or not the flow or the presence of water is continuous or intermittent.

WATER TREATMENT PLANT AND RESERVOIRS means any facility used in the collection, treatment, testing, storage, pumping, or distribution of water for public water system.

WATER WELL means an opening in the ground, whether drilled or altered from its natural state, that is used for the production of groundwater for any purpose, and includes any related equipment, buildings, structures and appurtenances.

WATERCOURSE means a naturally occurring, flowing water body.

WETLAND means those areas that are inundated and saturated by surface or groundwater at a frequency and duration sufficient to support, and that under normal circumstances do support, a prevalence of vegetation typically adapted for life in saturated soil conditions including swamps, marshes, bogs and similar areas.

Y

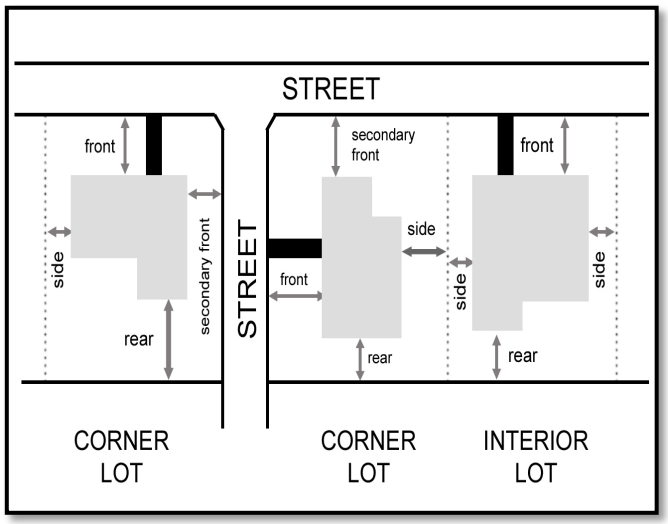

YARD means the area between a lot line and the nearest part of any building, structure, development, excavation or use on the lot. See figure.

YARD, FRONT means a yard extending across the full width of the site and measured, as to depth, at the least horizontal distance between the front street line and the nearest projection of the principal building. For waterfront parcels, the front yard of the parcel may be interpreted to be the yard that buts or is immediately adjacent to a reservoir, or water body. See figure.

YARD, REAR means a yard extending across the full width of a lot and situated between the rear lot lines and the nearest portion of the principal building. See figure.

YARD, SECONDARY FRONT means a yard on a corner lot with street frontage but which is not the frontage where the main entrance to the building or development is oriented or is the yard which is designated the secondary front by the Development Authority. See figure.

YARD, SIDE means a yard extending from the front yard to the rear yard and situated between the side lot lines and the nearest portion of the principal building. See figure.

Z

ZONING – see **LAND USE DISTRICTS**

Schedule 1

LAND USE DISTRICTS AND MAPS

Schedule 1

LAND USE DISTRICTS AND MAPS

SECTION 1 LAND USE DISTRICTS

1.1 The municipality is divided into those districts shown on the Vulcan County Land Use Districts Maps in this schedule (following this page).

1.2 Each district shown on the maps referred to in section 1.1 above shall be known by the following names and identifying abbreviations:

RURAL GENERAL	– RG
SINGLE LOT COUNTRY RESIDENTIAL	– SCR
SMALL HOLDINGS	– SH
GROUPED COUNTRY RESIDENTIAL	– GCR
GROUPED RESERVOIR RESIDENTIAL	– GRR
HAMLET RESIDENTIAL	– HR
HAMLET COMMERCIAL	– HC
RURAL COMMERCIAL	– RC
VULCAN INDUSTRIAL PARK	– VIP
RURAL INDUSTRIAL	– RI
RURAL RECREATIONAL	– RR
RESERVOIR VICINITY	– RV
URBAN FRINGE	– UF
PUBLIC SERVICE	– PS
DIRECT CONTROL	– DC

SECTION 2 HAMLETS

2.1 The following shall be considered hamlets for purposes of this Bylaw and their boundaries shall be as shown on the applicable Land Use Districts Map:

Brant
Ensign
Herronton
Kirkcaldy
Mossleigh
Shouldice
Travers

Schedule 2

LAND USE DISTRICT REGULATIONS

Schedule 2

LAND USE DISTRICT REGULATIONS

RURAL GENERAL – RG

PURPOSE: *To protect the agricultural land base of the municipality while allowing non-agricultural developments which complement the area's economy.*

SECTION 1 USES

1.1 **Permitted Uses**

Accessory building, structure or use
Additions to existing buildings
Agricultural building *(e)*
Agricultural operation *(e)*
Extensive agriculture *(e)*
Home occupation 1 *(e)*
Home occupation 2
Manufactured dwellings 1
Meteorological tower
Modular dwellings 1 and 2
Moved-in building
Moved-in dwelling
Ready-to-move dwelling
Renewable energy, individual
Shipping container *(e)*
Short-Term Rental 1
Sign, Category 1 *(e)*
Sign, Category 2
Single detached dwelling
Utilities *(e)*

1.2 **Discretionary Uses – MPC**

Abattoir
Agricultural Processing
Agricultural repair shop
Airstrip
Animal care service, small and large
Battery energy storage systems (BESS)
Cemetery and interment services
Child care facility
Community hall
Duplex
Exhibition centre
Home occupation 3

Discretionary Uses – DO

Dwelling unit, combined
Manufactured dwelling 2
Second dwelling unit
Secondary suite
Sign, Category 3

Discretionary Uses – MPC (continued)
Intensive horticultural operation
Kennel, breeding
Kennel, breeding *(existing)*
Multi-unit dwelling
Mushroom farm
Natural resource extraction and processing
Public building or use
Religious assembly
Renewable energy, commercial/industrial
Riding stable/arena
Rodeo grounds
School
Shooting range *(existing)*
Short-Term Rental 2
Stripping and sale of topsoil
Telecommunication tower
Work camp, long term
Work camp, short term

(e) means "Exempt" and development will not require a development permit if it meets all the provisions of this Bylaw and is in accordance with any applicable requirements in Schedule 3.

SECTION 2 PARCEL AND LOT SIZE

2.1 A minimum lot size of 0.4 ha (1 acre) is recommended for any permitted or discretionary use. This may be varied by the Municipal Planning Commission to reasonably accommodate the proposed use. Parcels and lot sizes for all land uses shall be determined by the Municipal Planning Commission. The following parcel sizes apply to the uses listed below.

2.2 Extensive Agriculture

(a) existing parcels;

(b) 64.8 ha (160 acres) or an unsubdivided quarter section.

2.3 Farmsteads

(a) existing parcels;

(b) flexible maximum based on farmstead definition.

2.4 Vacant Country Residential

(a) existing parcels;

(b) minimum of 0.4 ha (1 acre);

(c) maximum of 1.2 ha (3 acres.

2.5 Confined Feeding Operations

(a) existing parcels.

SECTION 3 DENSITY

3.1 The maximum number of parcels allowed on an unsubdivided quarter section of land shall be two, unless a redesignation process is undertaken and approved.

SECTION 4 MINIMUM SETBACK FROM PROPERTY LINES

4.1 All structures and buildings shall be setback 7.6 m (25 ft) from all property lines not fronting on or adjacent to a municipal roadway.

SECTION 5 MINIMUM SETBACKS FROM ROADS

5.1 No part of a building or structure shall be located within 38.1 m (125 ft) of the centre line of any public roadway which is not designated as a provincial highway under the *Highways Development and Protection Regulation*.

5.2 Any road designated as a provincial highway under the *Highways Development and Protection* Regulation is subject to setbacks as required by Alberta Transportation and any applications for development adjacent to a highway should be referred to Alberta Transportation for a Roadside Development Permit.

5.3 No part of any dugout, regardless of size, shall be located within 76.2 m (250 ft) of the right-of-way of a highway or public road.

5.4 Dugouts may be allowed closer to the centre line of a highway or public road if a barricade is installed along 100 percent of the length of that part of the dugout fronting the highway or public road and 25 percent of the length of the sides of the dugout.

SECTION 6 MINIMUM SETBACKS FROM IRRIGATION INFRASTRUCTURE

6.1 No part of a building or structure shall be located:

(a) within 10.0 m (33 ft) of the centreline of a Bow River Irrigation District (BRID) irrigation pipeline or 3.0 m (10 ft) of a registered right-of-way or easement for any irrigation pipeline or irrigation canal, whichever is greater;

(b) within 60.1 m (200 ft) from any BRID or Alberta Environment water reservoir measured from the water's edge at full supply level (FSL) or 30.5 m (100 ft) from the registered reservoir right-of-way, whichever is greater.

SECTION 7 ACCESS

7.1 The municipality may, at the time of subdivision or development, require the developer to enter into an agreement for the construction or upgrade of any approach(es) necessary to serve the development area in accordance with County Design Guidelines.

7.2 To ensure proper emergency access, all developments shall have direct legal and physical access to a public roadway in accordance with County Design Guidelines. If the development is within 300 m (984.3 ft.) of a provincial highway, direct legal and physical access to a public roadway shall be to the satisfaction of Alberta Transportation.

7.3 The requirement for a service road or subdivision street to provide access may be imposed as a condition of subdivision approval for any new development. Survey and construction costs shall be the responsibility of the applicant.

SECTION 8 ACCESSORY BUILDINGS

8.1 An accessory building shall not be used as a dwelling unit except where approval is granted for a Dwelling Unit, Combined.

8.2 An accessory building shall be setback a minimum 3.0 m (10 ft) from the principal dwelling and from all other structures on the same lot.

8.3 Where a structure is attached to the principal building on a site by a roof, an open or enclosed structure, a floor or foundation, it is to be considered a part of the principal building and is not an accessory building.

8.4 An accessory building shall only be constructed after the principal building has been constructed or the principal use established; except where the accessory building is used for agricultural purposes as outlined in Section 1.4(a) of Schedule 3.

SECTION 9 FENCES AND SHELTERBELTS

9.1 Agricultural fences constructed of rails, stakes, strung wire, or similar material with more than 85 percent of their surface area open for free passage of light and air may be located along the property boundaries of any agricultural parcel and are not subject to the 38.1 m (125 ft) setback from municipal roads or the required setbacks for the land use district.

9.2 Fences used as an enclosure, barrier, boundary, means of protection, privacy screening or confinement constructed of any allowable material (wood, stone/brick, metal, or plastic) with less than 85 percent of their surface area open for free passage of light must be located outside the required setbacks for the land use district and shall not exceed 2.4m (8 ft.) in height.

9.3 In rural areas along municipal roads, the construction or erection of a fence, hedge or shelterbelt shall comply with the following:

(a) no fence, hedge, tree or shelterbelt shall be erected which would unduly restrict the vision of approaching traffic; and

(b) no fence, hedge, tree or shelterbelt under Section 9.2 shall be erected closer than 7.6 m (25 ft) of the right-of-way of a municipal road. This provision shall not apply to existing yardsites developed before the passing of this Bylaw.

SECTION 10 SERVICING REQUIREMENTS

10.1 Every development shall be required to install a sewage disposal system and potable water system to the satisfaction of the Development Authority and in accordance with any applicable County Design Guidelines.

10.2 The Development Authority may refuse a development if the parcel on which it is proposed is not large enough, or suitable in any other way, to support a sewage disposal system to the standard required by the Alberta Private Sewage Systems Standard of Practice or this Bylaw.

SECTION 11 SUBDIVISION

General

11.1 The Municipal Planning Commission may only approve one subdivision on an unsubdivided quarter section within the Rural General – RG district. The Municipal Planning Commission may consider a quarter section to be unsubdivided if previous subdivisions were for the purpose of:

(a) public or quasi-public use;

(b) the parcel meets the requirements of 11.4, Agricultural Uses;

(c) the parcel meets the requirements of 11.6, Cut-Off or Fragmented Agricultural Parcel; or

(d) the parcel meets the requirements of 11.8, Subdivision of Existing Small Titles.

Agricultural Uses

11.2 A subdivision for an intensive horticultural use may be treated as an agricultural use and may be permitted as one of the allowable subdivisions from a quarter section.

11.3 The Municipal Planning Commission shall not approve an application for subdivision of a parcel on which an existing or proposed confined feeding operation (CFO) is located.

11.4 The creation of large agricultural parcels will be considered on a case-by-case basis and may include the following:

(a) the creation of a 32.4 ha (80 acre) parcel provided there is a minimum residual parcel size of 28.3 ha (70 acres); or

(b) logical divisions based on topography or other conditions at the discretion of the Municipal Planning Commission.

11.5 A parcel created pursuant to the provisions of the above policy or previous provincial policies may be eligible for the subdivision of an existing farmstead or vacant parcel provided that the proposal is consistent with the requirements established for single lot parcels in 11.10 and 11.11.

Existing Agricultural Parcels

11.6 The enlargement, reduction or realignment of an existing separate parcel may be approved provided that:

(a) the additional lands required are to accommodate existing or related improvements; or

(b) the proposal is to rectify or rationalize existing habitation, occupancy, cultivation or settlement patterns; and

(c) no additional parcels are created over and above those presently in existence;

(d) the proposed new lot and the proposed residual lot will continue to have direct legal and physical access to a public roadway, adequate development setbacks, and a suitable building site; and

(e) the size, location and configuration of the proposed lot will not significantly affect any irrigation or transportation system in the area nor the urban expansion strategies of neighbouring municipalities.

Cut-Off or Fragmented Agricultural Parcel

11.7 Subdivision of an undeveloped or developed cut-off parcel may be approved if:

(a) the proposed lot is separated from the residual by:

(i) a registered exception from the title,

(ii) a feature that creates a significant physical barrier to use of both sides as a unit;

(b) the proposed lot has legal access;

(c) neither the proposed lot or the residual parcel are occupied by a confined feeding operation.

11.8 A parcel created pursuant to the provisions of the above policy or previous provincial policies may be eligible for the subdivision of an existing farmstead or vacant parcel provided that the proposal is consistent with the requirements established for single lot parcels in 11.10 and 11.11 and the residual of the fragmented parcel must be at least 1.2 ha (3 acres) in size.

Subdivision of Existing Small Titles

11.9 An existing title of land that is 16.2 ha (40 acres) or less but greater than 2.4 ha (6 acres) may be divided into two parcels if:

(a) both parcels can accommodate joint access to a public road; and

(b) the subdivision does not propose to create more than four titles per quarter.

Single Lot Developed Farmstead

11.10 A subdivision that proposes to create a single parcel containing a developed residence or farmstead may be approved provided that:

(a) the proposed parcel is to be subdivided from a previously unsubdivided quarter section compliant with the farmstead definition with a flexible maximum parcel size based on the improvements; and

(b) **Farmstead** means a part of a parcel that:

(i) is presently or was formerly used as a single detached dwelling;

(ii) is further developed with agricultural buildings such as quonsets and grain bins, accessory buildings, structures such as corrals, storage compounds and/or storage or areas used for farm machinery, produce and fertilizer, dugout and/or water well or municipal rural water and septic system;

(iii) is of a compact size and physically defined by topography, shelterbelts or other physical characteristics;

(iv) does not include any cultivated farmland or lands suitable for agricultural production unless included within a shelter belt and/or physically defined area. Fencing alone shall not constitute a physically defined area if it encompasses agricultural land or hazard lands that are not necessary for the habitation of the proposed subdivision and that may be left with the larger agricultural parcel unless impractical to do so; limited pasture land used for grazing of animals may be included where the lands are part of a developed yard site; and

(c) the proposed lot on which the dwelling is located and the proposed residual parcel have direct legal and/or physical access to a public roadway;

(d) the access is satisfactory to Alberta Transportation where the access is onto or in close proximity to a primary highway;

(e) the size and location of the proposed lot will not significantly affect any irrigation system in the area;

(f) the dwelling unit located on the proposed parcel can meet or exceed the minimum distance separation (MDS) requirements from an existing confined feeding operation, as established in the *Agricultural Operation Practices Act, Standards and Administration Regulation*; and

(g) the residual parcel size after subdivision is to be flexible based on the proposal for subdivision.

Single Lot Vacant

11.11 A subdivision which proposes to create a single vacant parcel may be approved provided that:

(a) the proposed parcel to be created is a maximum of 1.2 ha (3.0 acres) in size;

(b) the proposed single residential lot contains, in the opinion of the Municipal Planning Commission, a buildable site;

(c) the proposed single residential lot can be serviced to the satisfaction of the Municipal Planning Commission;

(d) the development on the proposed single residential lot will not, in the opinion of the Municipal Planning Commission, inhibit public access to or otherwise have a detrimental effect on agriculture or the recreational use of a river valley, water body, environmentally sensitive area or special scenic location;

(e) the proposed lot and the residual parcel both have direct legal and physical access to a public roadway;

(f) the access is satisfactory to Alberta Transportation where the access is onto or in close proximity to a primary highway; and

(g) the size and location of the proposed lot will not significantly affect any irrigation system in the area.

Public and Institutional Uses

11.12 A subdivision application for public or institutional uses may be recommended for approval if:

(a) the Municipal Planning Commission is satisfied that suitable, existing alternative parcels are not reasonably available in another land use district;

(b) the legal and physical access, including access to the residual agricultural lot, satisfies Alberta Transportation, in the case of a provincial highway or the Municipal Planning Commission in the case of municipal roads; and

(c) the Municipal Planning Commission is satisfied that the use is primary, suitable, serviceable and will be developed as proposed; and

(d) where already functioning, the application encompasses the developed site only.

11.13 The conversion of small parcels established for public or institutional purposes to other uses should be limited to those developments which, in the opinion of the Municipal Planning Commission, are considered appropriate and compatible with surrounding uses.

SECTION 12 LAND SUITABILITY AND SERVICING REQUIREMENTS – See Schedule 4.

SECTION 13 STANDARDS OF DEVELOPMENT – See Schedule 5.

SINGLE LOT COUNTRY RESIDENTIAL – SCR

PURPOSE: *To accommodate one additional parcel for country residential use within a quarter section or an 80-acre parcel of land which has already met or exceeded the maximum of number of parcels.*

SECTION 1 USES

1.1 **Permitted Uses**

Accessory building, structure or use
Additions to existing buildings
Agricultural building *(e)*
Agricultural operation *(e)*
Home occupation 1 *(e)*
Manufactured dwelling 1
Modular dwellings 1 and 2
Moved-in building
Moved-in dwelling
Ready-to-move dwelling
Shipping container *(e)*
Short-Term Rental 1
Sign, Category 1 *(e)*
Sign, Category 2
Single detached dwelling
Utilities *(e)*

1.2 **Discretionary Uses – MPC**

Animal care service, small
Child care facility
Home occupation 3
Intensive horticultural operation
Kennel, breeding
Renewable energy, individual
Riding stable/arena
Short-Term Rental 2

Discretionary Uses – DO

Home occupation 2
Manufactured dwelling 2
Second dwelling unit
Secondary suite
Sign, Category 3

(e) means "Exempt" and development will not require a development permit if it meets all the provisions of this Bylaw and is in accordance with any applicable requirements in Schedule 3.

SECTION 2 PARCEL AND LOT SIZE

2.1 **Vacant Parcels**

(a) existing parcels;

(b) minimum of 0.4 ha (1 acre);

(c) maximum of 1.2 ha (3 acres).

2.2 **All Other Uses**

Parcel and lot sizes for all other land uses shall be determined by the Municipal Planning Commission after consideration of comments from relevant agencies and in accordance with, but not limited to, the *Municipal Government Act*, a regional plan, the *Subdivision and Development Regulation*, this Land Use Bylaw, the Municipal Development Plan and any other applicable legislation or regulations.

SECTION 3 DENSITY

3.1 Only one redesignated parcel per unsubdivided quarter section or 80-acre parcel is allowed.

SECTION 4 SERVICING REQUIREMENTS

4.1 Every development shall be required to install a sewage disposal system and potable water system to the satisfaction of the Development Authority and in accordance with any applicable County Design Guidelines. The Development Authority may refuse a development if the parcel on which it is proposed is not large enough to support a sewage disposal system to the standard required.

SECTION 5 SUBDIVISION

5.1 A subdivision which proposes to create a single parcel may be approved provided that:

(a) the proposed parcel to be created is a **minimum of 0.4 ha (1.0 acres) in size**; and a **maximum of 1.2 ha (3.0 acres) in size**;

(b) the proposed lot contains, in the opinion of the Municipal Planning Commission, either an existing dwelling or a buildable site;

(c) the proposed lot can be serviced to the satisfaction of the Municipal Planning Commission in accordance with County Design Guidelines;

(d) the development on the proposed lot will not, in the opinion of the Municipal Planning Commission, inhibit public access to or otherwise have a detrimental effect on agriculture or the recreational use of a river valley, water body, environmentally sensitive area or special scenic location;

(e) the proposed lot and the residual parcel both have direct legal and physical access to a public roadway to the satisfaction of the Municipal Planning Commission;

(f) the access is satisfactory to Alberta Transportation where the access is onto or in close proximity to a primary highway; and

(g) the size and location of the proposed lot will not significantly affect any irrigation system in the area.

5.2 The resubdivision of an existing single lot agricultural parcel is not allowed unless the entire parcel is redesignated to “Grouped Country Residential” or another appropriate land use district.

SECTION 6 MINIMUM SETBACK FROM PROPERTY LINES

6.1 All structures and buildings shall be setback 7.6 m (25 ft) from all property lines not fronting on or adjacent to a municipal roadway.

SECTION 7 MINIMUM SETBACKS FROM IRRIGATION INFRASTRUCTURE

7.1 No part of a building or structure shall be located:

(a) within 10.0 m (33 ft) of the centreline of a Bow River Irrigation District (BRID) irrigation pipeline or 3.0 m (10 ft) of a registered right-of-way or easement for any irrigation pipeline or irrigation canal, whichever is greater;

(b) within 60.1 m (200 ft) from any BRID or Alberta Environment water reservoir measured from the water's edge at full supply level (FSL) or 30.5 m (100 ft) from the registered reservoir right-of-way, whichever is greater.

SECTION 8 MINIMUM SETBACKS FROM ROADS

8.1 No part of a building or structure shall be located within 38.1 m (125 ft) of the centre line of any public roadway which is not designated as a provincial highway under the *Highways Development and Protection Regulation*.

8.2 Any road designated as a provincial highway under the *Highways Development and Protection Regulation* is subject to setbacks as required by Alberta Transportation and any applications for development adjacent to a highway should be referred to Alberta Transportation for a Roadside Development Permit.

8.3 No part of any dugout, regardless of size, shall be located within 76.2 m (250 ft) of the right-of-way of a highway or public road.

8.4 Dugouts may be allowed closer to the centre line of a highway or public road if a barricade is installed along 100 percent of the length of that part of the dugout fronting the highway or public road and 25 percent of the length of the sides of the dugout.

SECTION 9 ACCESS

9.1 The municipality may, at the time of subdivision or development, require the developer to enter into an agreement for the construction or upgrade of any approach(es) necessary to serve the development area in accordance with County Design Guidelines.

9.2 To ensure proper emergency access, all developments shall have direct legal and physical access to a public roadway in accordance with County Design Guidelines. If the development is within 300 m (984.3 ft.) of a provincial highway, direct legal and physical access to a public roadway shall be to the satisfaction of Alberta Transportation.

9.3 The requirement for a service road or subdivision street to provide access may be imposed as a condition of subdivision approval for any new development. Survey and construction costs shall be the responsibility of the applicant.

SECTION 10 ACCESSORY BUILDINGS

10.1 An accessory building shall not be used as a dwelling unit.

10.2 An accessory building shall be setback a minimum 3.0 m (10 ft) from the principal dwelling and from all other structures on the same lot.

10.3 Where a structure is attached to the principal building on a site by a roof, an open or enclosed structure, a floor or foundation, it is to be considered a part of the principal building and is not an accessory building.

10.4 An accessory building shall only be constructed after the principal building has been constructed or the principal use established; except where the accessory building is used for agricultural purposes as outlined in Section 1.4(a) of Schedule 3.

SECTION 11 FENCES AND SHELTERBELTS

11.1 Agricultural fences constructed of rails, stakes, strung wire, or similar material with more than 85 percent of their surface area open for free passage of light and air may be located along the property boundaries of any agricultural parcel and are not subject to the 38.1 m (125 ft) setback from municipal roads or the required setbacks for the land use district.

11.2 Fences used as an enclosure, barrier, boundary, means of protection, privacy screening or confinement constructed of any allowable material (wood, stone/brick, metal, or plastic) with less than 85 percent of their surface area open for free passage of light must be located outside the required setbacks for the land use district and shall not exceed 2.4m (8 ft.) in height.

13.3 In rural areas along municipal roads, the construction or erection of a fence, hedge or shelterbelt shall comply with the following:

(a) no fence, hedge, tree or shelterbelt shall be erected which would unduly restrict the vision of approaching traffic; and

(b) no fence, hedge, tree or shelterbelt under Section 11.2 shall be erected closer than 7.6 m (25 ft) of the right-of-way of a municipal road. This provision shall not apply to existing yardsites developed before the passing of this Bylaw.

SECTION 12 LAND SUITABILITY AND SERVICING REQUIREMENTS – See Schedule 4.

SECTION 13 STANDARDS OF DEVELOPMENT – See Schedule 5.

SMALL HOLDINGS – SH

PURPOSE: *To protect the agricultural land base of the municipality while allowing a flexible parcel size based on the practicalities of agricultural production and the physical characteristics of the land.*

SECTION 1 USES

1.1 Permitted Uses

Accessory building, structure or use
Additions to existing buildings
Agricultural building *(e)*
Agricultural operation *(e)*
Home occupation 1 *(e)*
Manufactured dwellings 1
Modular dwellings 1 and 2
Moved-in building
Moved-in dwelling
Ready-to-move dwelling
Shipping container *(e)*
Short-Term Rental 1
Sign, Category 1 *(e)*
Sign, Category 2 and 3
Single detached dwelling
Utilities *(e)*

1.2 Discretionary Uses – MPC

Animal care service, small
Child care facility
Home occupation 2
Intensive horticultural operation
Kennel, breeding
Renewable energy, individual
Riding stable/arena
Short-Term Rental 2

Discretionary Uses – DO

Home occupation 3
Manufactured dwelling 2
Second dwelling unit
Secondary suite
Sign, Category 3

(e) means "Exempt" and development will not require a development permit if it meets all the provisions of this Bylaw and is in accordance with any applicable requirements in Schedule 3.

SECTION 2 PARCEL AND LOT SIZE

2.1 Single Lot Developed Farmstead

(a) existing parcels;

(b) minimum of 1.2 ha (3 acre);

(c) maximum of 4.0 ha (10 acres).

2.2 **Vacant Parcels**

(a) existing parcels;

(b) minimum of 1.2 ha (3 acres);

(c) maximum of 4.0 ha (10 acres).

2.3 **All Other Uses**

Parcel and lot sizes for all other land uses shall be determined by the Municipal Planning Commission after consideration of comments from relevant agencies and in accordance with, but not limited to, the *Municipal Government Act*, a regional plan, the *Subdivision and Development Regulation*, this Land Use Bylaw, the Municipal Development Plan and any other applicable legislation or regulations.

SECTION 3 DENSITY

3.1 Only one redesignated parcel per unsubdivided quarter section or 80 acre parcel is allowed.

3.2 The resubdivision of an existing small holdings parcel is not allowed unless the entire parcel is redesignated to "Grouped Country Residential" or another appropriate land use district.

SECTION 4 SERVICING REQUIREMENTS

4.1 Every development shall be required to install a sewage disposal system and potable water system to the satisfaction of the Development Authority and in accordance with any applicable County Design Guidelines. The Development Authority may refuse a development if the parcel on which it is proposed is not large enough to support a sewage disposal system to the standard required.

SECTION 5 SUBDIVISION

5.1 A subdivision that proposes to create a single lot country residential parcel containing a developed residence or farmstead and additional cultivated or pasture land may be approved provided that:

(a) the proposed parcel to be created is a **minimum of 1.2 ha (3.0 acres) in size**; and a **maximum of 4.0 ha (10.0 acres) in size**;

(b) the proposed lot contains an existing dwelling;

(c) the proposed lot can be serviced to the satisfaction of the Municipal Planning Commission in accordance with County Design Guidelines;

(d) the development on the proposed lot will not, in the opinion of the Municipal Planning Commission, inhibit public access to or otherwise have a detrimental effect on agriculture or the recreational use of a river valley, water body, environmentally sensitive area or special scenic location;

(e) the proposed lot and the residual parcel both have direct legal and physical access to a public roadway to the satisfaction of the Municipal Planning Commission;

(f) the access is satisfactory to Alberta Transportation where the access is onto or in close proximity to a primary highway;

(g) the size and location of the proposed lot will not significantly affect any irrigation system in the area; and

(h) the residual parcel size after subdivision is to be flexible based on the proposal for subdivision.

5.2 A subdivision that proposes to create a single, vacant parcel may be approved provided that:

(a) the proposed parcel to be created is a **minimum of 1.2 ha (3.0 acres) in size** and a **maximum of 4.0 ha (10.0 acres) in size**;

(b) the proposed single residential lot contains, in the opinion of the Municipal Planning Commission, a buildable site;

(c) the proposed parcel can be serviced to the satisfaction of the Municipal Planning Commission;

(d) the development on the proposed single residential lot will not, in the opinion of the Municipal Planning Commission, inhibit public access to or otherwise have a detrimental effect on agriculture or the recreational use of a river valley, water body, environmentally sensitive area or special scenic location;

(e) the proposed lot and the residual parcel both have direct legal and physical access to a public roadway to the satisfaction of the Municipal Planning Commission;

(f) the access is satisfactory to Alberta Transportation where the access is onto or in close proximity to a primary highway;

(g) the size and location of the proposed lot will not significantly affect any irrigation system in the area;

(h) the residual parcel size after subdivision is to be flexible based on the proposal for subdivision.

SECTION 6 MINIMUM SETBACK FROM PROPERTY LINES

6.1 All structures and buildings shall be setback 7.6 m (25 ft) from all property lines not fronting on or adjacent to a municipal roadway.

SECTION 7 MINIMUM SETBACKS FROM IRRIGATION INFRASTRUCTURE

7.1 No part of a building or structure shall be located:

(a) within 10.0 m (33 ft) of the centreline of a Bow River Irrigation District (BRID) irrigation pipeline or 3.0 m (10 ft) of a registered right-of-way or easement for any irrigation pipeline or irrigation canal, whichever is greater;

(b) within 60.1 m (200 ft) from any BRID or Alberta Environment water reservoir measured from the water's edge at full supply level (FSL) or 30.5 m (100 ft) from the registered reservoir right-of-way, whichever is greater.

SECTION 8 MINIMUM SETBACKS FROM ROADS

8.1 No part of a building or structure shall be located within 38.1 m (125 ft) of the centre line of any public roadway which is not designated as a provincial highway under the *Highways Development and Protection Regulation*.

8.2 Any road designated as a provincial highway under the *Highways Development and Protection Regulation* is subject to setbacks as required by Alberta Transportation and any applications for development adjacent to a highway should be referred to Alberta Transportation for a Roadside Development Permit.

8.3 No part of any dugout, regardless of size, shall be located within 76.2 m (250 ft) of the right-of-way of a highway or public road.

8.4 Dugouts may be allowed closer to the centre line of a highway or public road if a barricade is installed along 100 percent of the length of that part of the dugout fronting the highway or public road and 25 percent of the length of the sides of the dugout.

SECTION 9 ACCESS

9.1 The municipality may, at the time of subdivision or development, require the developer to enter into an agreement for the construction or upgrade of any approach(es) necessary to serve the development area in accordance with County Design Guidelines.

9.2 To ensure proper emergency access, all developments shall have direct legal and physical access to a public roadway in accordance with County Design Guidelines. If the development is within 300 m (984.3 ft.) of a provincial highway, direct legal and physical access to a public roadway shall be to the satisfaction of Alberta Transportation.

9.3 The requirement for a service road or subdivision street to provide access may be imposed as a condition of subdivision approval for any new development. Survey and construction costs shall be the responsibility of the applicant.

SECTION 10 ACCESSORY BUILDINGS

10.1 An accessory building shall not be used as a dwelling unit.

10.2 An accessory building shall be setback a minimum 3.0 m (10 ft) from the principal dwelling and from all other structures on the same lot.

10.3 Where a structure is attached to the principal building on a site by a roof, an open or enclosed structure, a floor or foundation, it is to be considered a part of the principal building and is not an accessory building.

10.4 An accessory building shall only be constructed after the principal building has been constructed or the principal use established; except where the accessory building is used for agricultural purposes as outlined in Section 1.4(a) of Schedule 3.

SECTION 11 FENCES AND SHELTERBELTS

11.1 Agricultural fences constructed of rails, stakes, strung wire, or similar material with more than 85 percent of their surface area open for free passage of light and air may be located along the property boundaries of any agricultural parcel and are not subject to the 38.1 m (125 ft) setback from municipal roads or the required setbacks for the land use district.

11.2 Fences used as an enclosure, barrier, boundary, means of protection, privacy screening or confinement constructed of any allowable material (wood, stone/brick, metal, or plastic) with less than 85 percent of their surface area open for free passage of light must be located outside the required setbacks for the land use district and shall not exceed 2.4m (8 ft.) in height.

11.3 In rural areas along municipal roads, the construction or erection of a fence, hedge or shelterbelt shall comply with the following:

(a) no fence, hedge, tree or shelterbelt shall be erected which would unduly restrict the vision of approaching traffic; and

(b) no fence, hedge, tree or shelterbelt under Section 11.2 shall be erected closer than 7.6 m (25 ft) of the right-of-way of a municipal road. This provision shall not apply to existing yardsites developed before the passing of this Bylaw.

SECTION 12 LAND SUITABILITY AND SERVICING REQUIREMENTS – See Schedule 4.

SECTION 13 STANDARDS OF DEVELOPMENT – See Schedule 5.

GROUPED COUNTRY RESIDENTIAL – GCR

PURPOSE: *To provide for clustered large lot residential development on parcels that can support private water and sewage systems in areas where there is a minimum of conflict with adjacent land uses pursuant to the Municipal Development Plan.*

SECTION 1 USES

1.1 **Permitted Uses**

Accessory building *(less than 1,600 ft^2)*
Accessory structure or use
Additions to existing buildings
Home occupation 1
Manufactured dwelling 1
Modular dwelling 1
Ready-to-move dwelling
Sign, Category 1 *(e)*
Single detached dwelling
Utilities *(e)*

1.2 **Discretionary Uses – MPC**

Accessory building *(greater than 1,600 ft^2)*
Child care facility
Intensive horticultural operation
Parks and playgrounds
Renewable energy, individual
Riding stable/arena
Second dwelling unit
Secondary suite
Shipping container
Short-Term Rental 2

Discretionary Uses – DO

Home occupation 2
Manufactured dwelling 2
Modular dwelling 2
Moved-in building
Moved-in dwelling
Short-Term Rental 1

(e) means "Exempt" and development will not require a development permit if it meets all the provisions of this Bylaw and is in accordance with any applicable requirements in Schedule 3.

SECTION 2 PARCEL AND LOT SIZE

2.1 **Vacant Parcels**

(a) existing parcels;

(b) minimum of 0.4 ha (1 acre);

(c) maximum of 1.2 ha (3 acres).

2.2 **All Other Uses**

Parcel and lot sizes for all other land uses shall be determined by the Municipal Planning Commission after consideration of comments from relevant agencies and in accordance with, but not limited to, the *Municipal Government Act*, a regional plan, the *Subdivision and Development Regulation*, this Land Use Bylaw, the Municipal Development Plan and any other applicable legislation or regulations.

SECTION 3 DENSITY

3.1 The creation of three or more new contiguous lots to a maximum of 10 contiguous lots may be allowed on a quarter section of land.

3.2 The Municipal Planning Commission may increase or decrease the total number of parcels based on location and/or the suitability of the land to be subdivided or developed, etc. in accordance with an adopted area structure plan.

SECTION 4 SERVICING REQUIREMENTS

4.1 Every development shall be required to install a sewage disposal system and potable water system to the satisfaction of the Development Authority and in accordance with any applicable County Design Guidelines. The Development Authority may refuse a development if the parcel on which it is proposed is not large enough to support a sewage disposal system to the standard required.

SECTION 5 MINIMUM FLOOR AREA REQUIREMENT

5.1 The minimum floor area of the principal dwelling shall not be less than 74.3 m^2 (800 ft^2), not including multi-unit dwellings.

SECTION 6 MAXIMUM BUILDING HEIGHT

6.1 Principal Building: 10.5 m (34.4 ft)

6.2 Accessory Building(s): one at 6.7 m (22 ft) with all subsequent buildings at 4.6 m (15 ft)

SECTION 7 MAXIMUM LOT COVERAGE

7.1 Principal Building: 10%

7.2 Accessory Building(s): 5% (cumulative of all accessory buildings)

SECTION 8 MINIMUM SETBACK FROM PROPERTY LINES

8.1 All structures and buildings shall be setback 7.6 m (25 ft) or as established in an adopted area structure plan or conceptual scheme from all property lines not fronting on or adjacent to a municipal roadway.

SECTION 9 MINIMUM SETBACKS FROM ROADS

9.1 No part of a building or structure shall be located within 38.1 m (125 ft) of the centre line of any public roadway which is not designated as a provincial highway under the *Highways Development and Protection Regulation*.

9.2 Any road designated as a provincial highway under the *Highways Development and Protection Regulation* is subject to setbacks as required by Alberta Transportation and any applications for development adjacent to a highway should be referred to Alberta Transportation for a Roadside Development Permit.

9.3 No part of any dugout, regardless of size, shall be located within 76.2 m (250 ft) of the right-of-way of a highway or public road.

9.4 Dugouts may be allowed closer to the centre line of a highway or public road if a barricade is installed along 100 percent of the length of that part of the dugout fronting the highway or public road and 25 percent of the length of the sides of the dugout.

SECTION 10 MINIMUM SETBACKS FROM IRRIGATION INFRASTRUCTURE

10.1 No part of a building or structure shall be located:

(a) within 10.0 m (33 ft) of the centreline of a Bow River Irrigation District (BRID) irrigation pipeline or 3.0 m (10 ft) of a registered right-of-way or easement for any irrigation pipeline or irrigation canal, whichever is greater;

(b) within 60.1 m (200 ft) from any BRID or Alberta Environment water reservoir measured from the water's edge at full supply level (FSL) or 30.5 m (100 ft) from the registered reservoir right-of-way, whichever is greater.

SECTION 11 ACCESS

11.1 The municipality may, at the time of subdivision or development, require the developer to enter into an agreement for the construction or upgrade of any approach(es) necessary to serve the development area in accordance with County Design Guidelines.

11.2 To ensure proper emergency access, all developments shall have direct legal and physical access to a public roadway in accordance with County Design Guidelines. If the development is within 300 m (984.3 ft.) of a provincial highway, direct legal and physical access to a public roadway shall be to the satisfaction of Alberta Transportation.

11.3 The requirement for a service road or subdivision street to provide access may be imposed as a condition of subdivision approval for any new development. Survey and construction costs shall be the responsibility of the applicant.

SECTION 12 ACCESSORY BUILDINGS

12.1 An accessory building shall not be used as a dwelling unit.

12.2 There shall be no more than three accessory buildings (not including attached garages and accessory structures) on any parcel.

12.3 An accessory building shall be setback a minimum 3.0 m (10 ft) from the principal dwelling and from all other structures on the same lot.

12.4 Where a structure is attached to the principal building on a site by a roof, an open or enclosed structure, a floor or foundation, it is to be considered a part of the principal building and is not an accessory building.

12.5 An accessory building exceeding 148.6 m^2 (1,600 ft^2) may be approved where, in the opinion of the Development Authority, the size, design, location, building style and materials of the building are complementary to the principal building and compatible with adjacent developments. The Development Authority may require high quality design measures and building materials in order to mitigate the impact of a large accessory building.

12.6 An accessory building shall only be constructed after the principal building has been constructed or the principal use established; except where the accessory building is used for agricultural purposes as outlined in Section 1.4(a) of Schedule 3.

SECTION 13 FENCES AND SHELTERBELTS

13.1 Agricultural fences constructed of rails, stakes, strung wire, or similar material with more than 85 percent of their surface area open for free passage of light and air may be located along the property boundaries of any agricultural parcel and are not subject to the 38.1 m (125 ft) setback from municipal roads or the required setbacks for the land use district.

13.2 Fences used as an enclosure, barrier, boundary, means of protection, privacy screening or confinement constructed of any allowable material (wood, stone/brick, metal, or plastic) with less than 85 percent of their surface area open for free passage of light must be located outside the required setbacks for the land use district and shall not exceed 2.4m (8 ft.) in height.

13.3 In rural areas along municipal roads, the construction or erection of a fence, hedge or shelterbelt shall comply with the following:

(a) no fence, hedge, tree or shelterbelt shall be erected which would unduly restrict the vision of approaching traffic; and

(b) no fence, hedge, tree or shelterbelt under Section 13.2 shall be erected closer than 7.6 m (25 ft) of the right-of-way of a municipal road. This provision shall not apply to existing yardsites developed before the passing of this Bylaw.

SECTION 14 LAND SUITABILITY AND SERVICING REQUIREMENTS – See Schedule 4.

SECTION 15 STANDARDS OF DEVELOPMENT – See Schedule 5.

GROUPED RESERVOIR RESIDENTIAL – GRR

PURPOSE: *To provide for the urban-style subdivision and/or development, with the provision of communal water and sewer systems, of residential and resort communities within Vulcan County.*

SECTION 1 USES

1.1 **Permitted Uses**

Accessory building, structure or use
Additions to existing buildings
Home occupation 1
Manufactured dwelling 1
Modular dwelling 1
Ready-to-move dwelling
Show home
Sign, Category 1 *(e)*
Single detached dwelling
Utilities *(e)*

1.2 **Discretionary Uses – MPC**

Boat launch
Child care facility
Dwelling:
- Duplex
- Multi-unit dwelling
- Senior citizen housing

Group home, limited
Manufactured dwelling park/community
Marina
Office
Parking areas and structures
Parks and playgrounds
Public building or use
Recreation facility
Recreational vehicle storage
Renewable energy, individual
Restaurant
Retail
Secondary suite
Short-Term Rental 2

Discretionary Uses – DO

Home occupation 2
Manufactured dwelling 2
Moved-in dwelling
Short-Term Rental 1

(e) means "Exempt" and development will not require a development permit if it meets all the provisions of this Bylaw and is in accordance with any applicable requirements in Schedule 3.

SECTION 2 SPECIFIC USE PROVISIONS

2.1 The use provisions for Lots 41-84, Block 2; Lots 1-33, Block 3; and Lots 1-7, Block 4; all within Plan 001 2103 in the Lake McGregor Resort community (including any subsequent legal description), include, in addition to the list of uses in Section 1 of this district:

(a) Permitted Uses

Park model recreational unit
Park model trailer

2.2 The use provisions for Lots 1-15, Plan 991 2215, in the Lake McGregor Landing community (including any subsequent legal description), include, in addition to the list of uses in Section 1 of this district:

(a) Discretionary Uses - DO

Park model recreational unit

SECTION 3 SPECIAL REFERRAL

3.1 The Development Officer shall refer all Discretionary Use – MPC applications to the appropriate overseeing community body for comment prior to presentation to the Municipal Planning Commission.

SECTION 4 MINIMUM LOT SIZE

Use	Width		Length		Area	
	m	ft.	m	ft.	m^2	ft^2
Single detached dwellings and manufactured dwellings	15.2	50	30.5	100	464.5	5,000
Two-unit dwellings	21.3	70	30.5	100	650.3	7,000
Row dwelling or townhouses						
- interior unit	4.9	16	30.5	100	148.6	1,600
- end unit	7.6	25	30.5	100	232.2	2,500
Multi-unit dwelling	24.4	80	30.5	100	743.2	8,000
Park model recreation unit	9.1	30	20.1	66	180.9	1,980
Commercial uses	15.2	50	30.5	100	464.5	5,000
All other uses	As required by the Municipal Planning Commission					

SECTION 5 MINIMUM FLOOR AREA REQUIREMENT

5.1 The minimum floor area of the principal dwelling shall not be less than 74.3 m^2 (800 ft^2), not including multi-unit dwellings.

5.2 The minimum floor area required in 5.1 does not apply to park model trailers and park model recreational units.

SECTION 6 MINIMUM SETBACK FROM PROPERTY LINES

6.1 The minimum setback for any building or structure within this district (except where specific community setbacks are established in sections below) shall be:

Use	Front Yard		Side Yard		Rear Yard	
	m	ft.	m	ft.	m	ft.
All uses	6.1	20	1.5	5	6.1	20

6.2 In the case of corner lots, a front yard of at least 6.1 m (20 ft) shall be provided on one frontage and a secondary front yard of at least 3.0 m (10 ft) shall be provided for the other frontage.

SECTION 7 MINIMUM SETBACK FROM PROPERTY LINES IN LAKE MCGREGOR RESORT

7.1 The minimum setback for any building or structure located for Lots 1 to 69, Block 1, and Lots 1 to 40, Block 2, in Plan 001 2103, within Lake McGregor Resort (including any subsequent legal description), shall be:

Use	Front Yard		Side Yard		Rear Yard	
	m	ft.	m	ft.	m	ft.
All uses	4.0	13	1.2	4	4.0	13

7.2 The minimum setback for any building or structure for Lots 41 to 84, Block 2; Lots 1 to 33, Block 3; Lots 1 to 7, Block 4; and Lots 1 to 9, Block 5, in Plan 001 2103, within Lake McGregor Resort (including any subsequent legal description), shall be:

Use	Front Yard		Side Yard		Rear Yard	
	m	ft.	m	ft.	m	ft.
All uses	4.0	13	1.2	4	4.0	13

SECTION 8 MINIMUM SETBACK FROM PROPERTY LINES IN LAKE MCGREGOR LANDING

8.1 The minimum setback for any building or structure within Lake McGregor Landing (Plan 991 2215) shall be:

Use	Front Yard		Side Yard		Rear Yard	
	m	ft.	m	ft.	m	ft.
All uses	6.1	20	3.0	10	6.1	20

SECTION 9 ACCESS

9.1 The municipality may, at the time of subdivision or development, require the developer to enter into an agreement for the construction or upgrade of any approach(es) necessary to serve the development area in accordance with County Design Guidelines.

9.2 To ensure proper emergency access, all developments shall have direct legal and physical access to a public roadway in accordance with County Design Guidelines. If the development is within 300 m (984.3 ft.) of a provincial highway, direct legal and physical access to a public roadway shall be to the satisfaction of Alberta Transportation.

9.3 The requirement for a service road or subdivision street to provide access may be imposed as a condition of subdivision approval for any new development. Survey and construction costs shall be the responsibility of the applicant.

SECTION 10 MAXIMUM LOT COVERAGE

10.1 The maximum site coverage for all the permitted and discretionary uses listed above:

(a) principal residential and accessory buildings – 50 percent;

(b) all other uses – as required by the Development Authority;

(c) there shall not be more than two accessory buildings located on an individual residential parcel, or plot (in an unsubdivided manufactured dwelling park/community).

SECTION 11 MAXIMUM BUILDING HEIGHT

11.1 Principal building: 10.5 m (34.4 ft)

11.2 Accessory building(s): one at 6.7 m (22 ft) with all subsequent buildings at 4.6 m (15 ft)

SECTION 12 ACCESSORY BUILDINGS

12.1 An accessory building shall not be used as a dwelling unit.

12.2 An accessory building shall not be located in the front yard or on an easement.

12.3 An accessory building shall be setback a minimum 3.0 m (10 ft) from the principal dwelling and from all other structures on the same lot.

12.4 Where a structure is attached to the principal building on a site by a roof, an open or enclosed structure, a floor or foundation, it is to be considered a part of the principal building and is not an accessory building.

12.5 An accessory building shall only be constructed after the principal building has been constructed or the principal use established; except where the accessory building is used for agricultural purposes as outlined in Section 1.4(a) of Schedule 3.

SECTION 13 SERVICING REQUIREMENTS

13.1 Every development shall be required to connect to municipal/communal services where the services are available.

13.2 For communities without municipal/communal servicing, every development shall be required to install a sewage disposal system and potable water system to the satisfaction of the Development Authority and in accordance with any applicable County Design Guidelines. The Development Authority may refuse a development if the parcel on which it is proposed is not large enough to support a sewage disposal system to the standard required.

SECTION 14 PARK MODELS RECREATIONAL UNITS

14.1 The Development Authority shall only issue a development permit for a park model recreational unit if, in its opinion, the unit is to only be used for seasonal residential and/or recreational use.

14.2 The Development Authority may, as a condition of development permit, limit or prohibit the type or extent of certain service connections that may be connected to a park model recreational unit in order to ensure that the unit is only to be used for seasonal use.

SECTION 15 REFUSE COLLECTION AND STORAGE

15.1 Refuse and garbage shall be kept in a suitable container or enclosure and shall be effectively screened from public view.

SECTION 16 FENCES AND CORNER VISIBILITY

16.1 No fence, wall, hedge or any combination thereof, lying within 6.1 m (20 ft) of the right-of-way of a public roadway (excluding lanes) shall extend more than 0.9 m (3 ft) above the ground (except in the case of corner lots where one yard is considered as the side yard) unless permitted by the Development Authority.

16.2 On a corner lot nothing shall be erected, placed, planted or allowed to grow in such a manner as to materially impede vision between a height of 0.9 and 3.0 m (3 and 10 ft) above the centre line grades of the intersecting streets in the area bounded by the property lines of such corner lots and a line joining points along the said property lines 7.6 m (25 ft) from the point of intersection (see Figure).

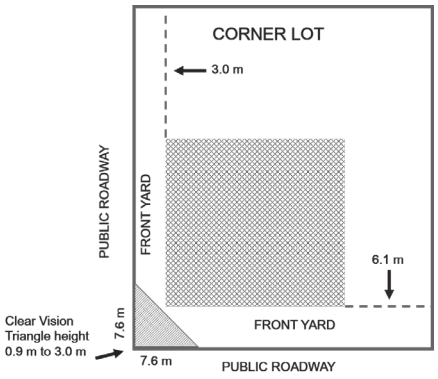

16.3 Fences enclosing rear and side yards shall not exceed 2.4 m (8 ft) in height.

SECTION 17 PROJECTION OVER YARDS

17.1 Except as provided in this section, no portion of the principal building shall project into the minimum setbacks as required by the land use district regulations.

17.2 The portions of any attachments to a principal building which may project over or on a minimum setback on a lot in a Grouped Reservoir Residential district are:

(a) a cornice, a sill, a canopy, fireplace, eaves or chimney which project a distance not exceeding on half of the minimum side setback required for the lot;

(b) an open veranda, porch, balcony, fireplace, chimney or other similar projections as determined by the Development Officer, which project not more than 1.5 m (5 ft) over or on a minimum front or rear setback; or

(c) open staircases with or without a landing if they do not project more than 2.4 m (8 ft) over or into the rear yard setback and not exceeding one half of the minimum side yard setback required for the lot.

SECTION 18 LANDSCAPING AND SCREENING

18.1 The front yard (except for sidewalks and driveways) shall be landscaped to the satisfaction of the Development Officer. Landscaping may consist of any or all of the following:

(a) trees, shrubs, lawn, flowers;

(b) large feature rocks, field stone and other hard surface materials (Development Authority approval is required if this type of landscaping exceeds 25 percent of the total landscaped area);

(c) berming, terracing;

(d) innovative landscaping features;

(e) landscape ornaments;

(f) other features that may include, but not limited to, front walkways and steps.

18.2 In the case of corner lots, the minor street frontage shall also be landscaped to the satisfaction of the Development Officer.

18.3 No non-residential development shall be allowed which may interfere with the amenities of residential areas. The Development Authority may:

(a) require the development to be screened to minimize conflict between residential and non-residential land uses; or

(b) may refuse the development if the potential conflict cannot be resolved.

SECTION 19 LAND SUITABILITY AND SERVICING REQUIREMENTS – See Schedule 4.

SECTION 20 STANDARDS OF DEVELOPMENT – See Schedule 5.

HAMLET RESIDENTIAL – HR

PURPOSE: *To provide for a high quality living environment for hamlet residents pursuant to the Municipal Development Plan recognizing that hamlets act as an important service centre for the agricultural community.*

SECTION 1 USES

1.1 **Permitted Uses**

Accessory building, structure or use
Additions to existing buildings
Home occupation 1
Manufactured dwelling 1
Modular dwelling 1
Ready-to-move dwelling
Sign, Category 1 *(e)*
Single detached dwelling
Utilities *(e)*

1.2 **Discretionary Uses – MPC**

Child care facility
Duplex
Group home, limited
Group home, major
Manufactured dwelling park/community
Modular dwelling 2
Multi-unit dwelling
Parking areas and structures
Parks and playgrounds
Public building or use
Religious assembly
Secondary suite
Senior citizen housing
Short-Term Rental 2

Discretionary Uses – DO

Home occupation 2
Manufactured dwelling 2
Moved-in building
Moved-in dwelling
Renewable energy, individual
Short-Term Rental 1

(e) means "Exempt" and development will not require a development permit if it meets all the provisions of this Bylaw and is in accordance with any applicable requirements in Schedule 3.

SECTION 2 SPECIAL REFERRAL

2.1 The Development Officer shall refer all discretionary use applications to the appropriate Hamlet Advisory Committee and/or Condominium Association as well as any agent associated with architectural controls, comment prior to presentation to the Development Authority.

SECTION 3 MINIMUM LOT SIZE – General

3.1 The minimum lot size for uses in this land use district shall be:

Use	Width		Length		Area	
	m	ft.	m	ft.	m^2	ft^2
Unserviced lots	30.5	100	61.0	200	1858.0	20,000
Water distribution system only	30.5	100	45.7	150	1395.5	15,000
Sewage distribution system only	30.5	100	30.5	100	929.0	10,000

3.2 The minimum area and dimension required for any unserviced or partially serviced lots may be altered if supporting documentation is submitted and considered by the Municipal Planning Commission in accordance with Alberta Health Services and Alberta Municipal Affairs regulations or recommendations.

3.3 The minimum lot size for lots serviced with municipal water supply and sanitary sewer shall be:

Use	Width		Length		Area	
	m	ft.	m	ft.	m^2	ft^2
Single detached dwellings and manufactured dwellings	15.2	50	30.5	100	464.5	5,000
Two unit dwellings	21.3	70	30.5	100	650.3	7,000
Row dwelling or townhouses						
- interior unit	4.9	16	30.5	100	148.6	1,600
- end unit	7.6	25	30.5	100	232.2	2,500
Multi-unit dwelling	24.4	80	30.5	100	743.2	8,000
All other uses	As required by the Development Authority					

SECTION 4 MINIMUM SETBACK FROM PROPERTY LINES

General

4.1 The minimum setbacks for the principal dwelling shall be:

	Front Yard		Side Yard		Rear Yard	
Use	m	ft.	m	ft.	m	ft.
All uses	6.1	20	1.5	5	6.1	20

4.2 In the case of corner lots, a front yard of at least 6.1 m (20 ft) shall be provided on one frontage and a secondary front yard of at least 3.0 m (10 ft) shall be provided for the other frontage.

4.3 Accessory buildings shall not be less than 1.5 m (5 ft) from a side or rear lot line; overhanging eaves shall not be less than 0.3 m (1 ft) from a side lot line.

SECTION 5 ACCESS

5.1 The municipality may, at the time of subdivision or development, require the developer to enter into an agreement for the construction or upgrade of any approach(es) necessary to serve the development area in accordance with County Design Guidelines.

5.2 To ensure proper emergency access, all developments shall have direct legal and physical access to a public roadway in accordance with County Design Guidelines. If the development is within 300 m (984.3 ft.) of a provincial highway, direct legal and physical access to a public roadway shall be to the satisfaction of Alberta Transportation.

5.3 The requirement for a service road or subdivision street to provide access may be imposed as a condition of subdivision approval for any new development. Survey and construction costs shall be the responsibility of the applicant.

SECTION 6 MAXIMUM LOT COVERAGE

6.1 The maximum site coverage for all the permitted and discretionary uses listed above:

(a) principal building – 33 percent;

(b) accessory buildings – 15 percent;

(c) there shall not be more than two accessory buildings located on an individual residential parcel, or plot (in an unsubdivided manufactured dwelling park/community).

SECTION 7 MAXIMUM BUILDING HEIGHT

7.1 Principal building: 10.5 m (34.4 ft)

7.2 Accessory building(s): one at 6.7 m (22 ft) with all subsequent buildings at 4.6 m (15 ft)

SECTION 8 MINIMUM FLOOR AREA REQUIREMENT

8.1 The minimum floor area of the principal dwelling shall not be less than 74.3 m^2 (800 ft^2), not including multi-unit dwellings.

SECTION 9 ACCESSORY BUILDINGS AND STRUCTURES

9.1 An accessory building shall not be used as a dwelling unit.

9.2 An accessory building or structure shall be setback a minimum 3.0 m (10 ft) from the principal dwelling and from all other structures on the same lot.

9.3 An accessory building or structure shall not be located in a front yard or on an easement.

9.4 Where a structure is attached to the principal building on a site by a roof, an open or enclosed structure, a floor or foundation, it is to be considered a part of the principal building and is not an accessory building.

9.5 An accessory building shall only be constructed after the principal building has been constructed or the principal use established; except where the accessory building is used for agricultural purposes as outlined in Section 1.4(a) of Schedule 3.

SECTION 10 SERVICING REQUIREMENTS

10.1 Every development shall be required to connect to municipal/communal services where the services are available.

10.2 For hamlets without municipal/communal servicing, every development shall be required to install a sewage disposal system and potable water system to the satisfaction of the Development Authority and in accordance with any applicable County Design Guidelines. The Development Authority may refuse a development if the parcel on which it is proposed is not large enough to support a sewage disposal system to the standard required.

SECTION 11 BUILDING SETBACKS

11.1 The Development Authority may waive the setback requirement in a well-established residential area if, in its opinion, the setback blends in with the prevailing yard pattern.

11.2 The Development Authority may require varied front setbacks in new residential areas if, in its opinion, the variation in setbacks will not detract from the development of that area.

11.3 The Development Authority may require increased setbacks other than those listed in Section 4, if, in its opinion, such setbacks would be necessary.

11.4 The Development Authority may consider building setbacks to be measured from the building envelope to the furthest property line on lots subject to corner cuts for either roadways or lanes.

SECTION 12 FENCES AND CORNER VISIBILITY

12.1 No fence, wall, hedge or any combination thereof, lying within 6.1 m (20 ft) of the right-of-way of a public roadway (excluding lanes) shall extend more than 0.9 m (3 ft) above the ground (except in the case of corner lots where one yard is considered as the side yard) unless permitted by the Development Authority.

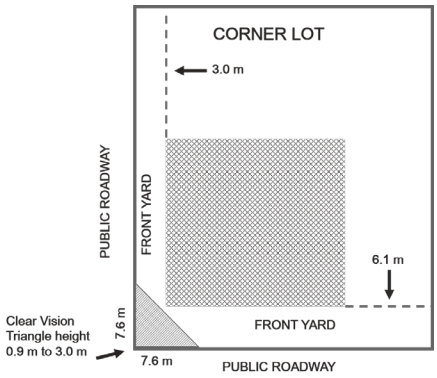

12.2 On a corner lot nothing shall be erected, placed, planted or allowed to grow in such a manner as to materially impede vision between a height of 0.9 and 3.0 m (3 and 10 ft) above the centre line grades of the intersecting streets in the area bounded by the property lines of such corner lots and a line joining points along the said property lines 7.6 m (25 ft) from the point of intersection (see Figure).

12.3 Fences enclosing rear and side yards shall not exceed 2.4 m (8 ft) in height.

SECTION 13 PROJECTION OVER YARDS

13.1 Except as provided in this section, no portion of the principal building shall project into the minimum setbacks as required by the land use district regulations.

13.2 The portions of any attachments to a principal building which may project over or on a minimum setback on a lot in a hamlet residential district are:

(a) a cornice, a sill, a canopy, fireplace, eaves or chimney which project a distance not exceeding on half of the minimum side setback required for the lot; or

(b) an open veranda, porch, balcony, fireplace, chimney or other similar projections as determined by the Development Officer, which project not more than 1.5 m (5 ft) over or on a minimum front or rear setback;

(c) open staircases with or without a landing if they do not project more than 2.4 m (8 ft) over or into the rear yard setback and not exceeding one half of the minimum side yard setback required for the lot.

SECTION 14 LANDSCAPING AND SCREENING

14.1 The front yard (except for sidewalks and driveways) shall be landscaped to the satisfaction of the Development Officer. Landscaping may consist of any or all of the following:

(a) trees, shrubs, lawn, flowers;

(b) large feature rocks, field stone and other hard surface materials (Development Authority approval is required if this type of landscaping exceeds 25 percent of the total landscaped area);

(c) berming, terracing;

(d) innovative landscaping features;

(e) landscape ornaments;

(f) other features that may include, but not limited to, front walkways and steps.

14.2 In the case of corner lots, the minor street frontage shall also be landscaped to the satisfaction of the Development Officer.

14.3 No non-residential development in hamlets shall be allowed which may interfere with the amenity of residential areas in the hamlet and the Development Authority may:

(a) require it be screened to minimize conflict between residential and non-residential land uses; or

(b) may refuse it if the potential conflict cannot be resolved.

SECTION 15 RECREATIONAL VEHICLES

15.1 A Recreational Vehicle is not allowed to be used or stored on undeveloped residential parcels.

15.2 One Recreational Vehicle may be stored, in a rear or side yard, on a developed residential parcel containing a habitable dwelling but is not to be used as a permanent dwelling unit. For the purpose of this provision, permanent means exceeding, 72 hours, consecutively or cumulatively within a 7 day period.

SECTION 16 LAND SUITABILITY AND SERVICING REQUIREMENTS – See Schedule 4.

SECTION 17 STANDARDS OF DEVELOPMENT – See Schedule 5.

HAMLET COMMERCIAL – HC

PURPOSE: *To provide for a high quality of commercial and light industrial development pursuant to the Municipal Development Plan recognition that hamlets act as an important service centre for the surrounding rural community.*

SECTION 1 USES

1.1 **Permitted Uses**

Accessory building, structure or use
Additions to existing buildings
Business support service
Community hall
Contractor, limited
Office
Sign, Category 1 *(e)*
Utilities *(e)*

1.2 **Discretionary Uses – MPC**

Agricultural processing
Agricultural repair shop
Animal care service, large
Animal care service, small
Auction market
Auto repair and paint shop
Auto sales and service
Bar/lounge
Bulk fertilizer storage and sales
Cannabis retail store
Car wash
Cardlock fuel dispensing facility
Child care facility
Commercial truck wash
Contractor, general
Crop spraying operation and facility
Drive-in restaurant
Equipment sales, rental and service
Farm supply and service
Farm/industrial machinery sales, rental and service
Farmer's market
Feed mills/Grain terminals
Fleet and transportation services 1 and 2
Funeral home
Gas station
Government services

Discretionary Uses – DO

Sign, Category 2 and 3

Discretionary Uses – MPC (continued)
Hotel/Motel
Industrial, light
Intensive horticultural operation
Liquor store
Lumber yard/building supply store
Manufacturing and fabrication operation
Medical treatment services
Mini-storage facility
Mixed use development
Moved-in building
Museum
Oilfield contractor services
Oilfield/pipe equipment and storage
Outdoor storage
Parking areas and structures
Personal service business
Public building or use
Recreation facility
Recycling facility
Religious assembly
Renewable energy, individual
Restaurant
Retail
Security suite
Shipping container
Truck transportation dispatch/depot
Warehousing and storage, general
Welding shop

(e) means "Exempt" and development will not require a development permit if it meets all the provisions of this Bylaw and is in accordance with any applicable requirements in Schedule 3.

SECTION 2 SPECIAL REFERRAL

2.1 The Development Officer shall refer all discretionary use applications to the appropriate Hamlet Advisory Committee or Condominium Association for comment prior to presentation to the Municipal Planning Commission.

SECTION 3 MINIMUM LOT SIZE

3.1

Use	Width		Length		Area	
	m	ft.	m	ft.	m^2	ft^2
Municipal sewer only	30.5	100	30.5	100	929.0	10,000
Municipal water only	30.5	100	45.7	150	1393.5	15,000
No municipal water or sewer	30.5	100	61.0	200	1858.0	20,000
Full municipal services	15.2	50	30.5	100	436.6	5,000

3.2 The minimum area and dimension required for any unserviced or partially serviced lots may be altered by the Municipal Planning Commission in accordance with Alberta Health Services and Alberta Municipal Affairs regulations or recommendations.

SECTION 4 MINIMUM SETBACK FROM PROPERTY LINES

4.1 The minimum setback for any building or structure shall be:

	Front Yard		Side Yard		Rear Yard	
Use	m	ft.	m	ft.	m	ft.
Principal uses	4.9	16	1.5	5	6.1	20
Accessory buildings	4.9	16	1.5	5	1.5	5

4.2 In the case of corner lots, a front yard of at least 6.1 m (20 ft) shall be provided on one frontage and a secondary front yard of at least 3.0 m (10 ft) shall be provided for the other frontage.

SECTION 5 ACCESS

5.1 The municipality may, at the time of subdivision or development, require the developer to enter into an agreement for the construction or upgrade of any approach(es) necessary to serve the development area in accordance with County Design Guidelines.

5.2 To ensure proper emergency access, all developments shall have direct legal and physical access to a public roadway in accordance with County Design Guidelines. If the development is within 300 m (984.3 ft.) of a provincial highway, direct legal and physical access to a public roadway shall be to the satisfaction of Alberta Transportation.

5.3 The requirement for a service road or subdivision street to provide access may be imposed as a condition of subdivision approval for any new development. Survey and construction costs shall be the responsibility of the applicant.

SECTION 6 MAXIMUM LOT COVERAGE

6.1 At the discretion of the Development Authority.

SECTION 7 MAXIMUM BUILDING HEIGHT

7.1 Principal building: 10.5 m (34.4 ft)

7.2 Accessory building(s): 6.7 m (22 ft)

SECTION 8 ACCESSORY BUILDINGS

8.1 An accessory building shall not be used as a dwelling unit.

8.2 An accessory building shall be setback a minimum 3.0 m (10 ft) from the principal dwelling and from all other structures on the same lot.

8.3 An accessory building shall not be located in a front yard or on an easement.

8.4 Where a structure is attached to the principal building on a site by a roof, an open or enclosed structure, a floor or foundation, it is to be considered a part of the principal building and is not an accessory building.

8.5 An accessory building shall only be constructed after the principal building has been constructed or the principal use established; except where the accessory building is used for agricultural purposes as outlined in Section 1.4(a) of Schedule 3.

SECTION 9 SERVICING REQUIREMENTS

9.1 Every development shall be required to connect to municipal/communal services where the services are available.

9.2 For hamlets without municipal/communal servicing, every development shall be required to install a sewage disposal system and potable water system to the satisfaction of the Development Authority and in accordance with any applicable County Design Guidelines. The Development Authority may refuse a development if the parcel on which it is proposed is not large enough to support a sewage disposal system to the standard required.

SECTION 10 FENCES AND CORNER VISIBILITY

10.1 No fence, wall, hedge or any combination thereof, lying within 6.1 m (20 ft) of the right-of-way of a public roadway (excluding lanes) shall extend more than 0.9 m (3 ft) above the ground (except in the case of corner lots where one yard is considered as the side yard) unless permitted by the Development Authority.

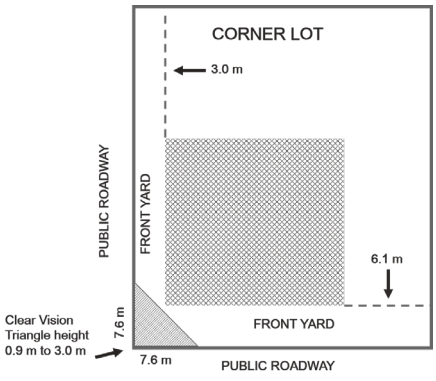

10.2 On a corner lot nothing shall be erected, placed, planted or allowed to grow in such a manner as to materially impede vision between a height of 0.9 and 3.0 m (3 and 10 ft) above the centre line grades of the intersecting streets in the area bounded by the property lines of such corner lots and a line joining points along the said property lines 7.6 m (25 ft) from the point of intersection (see Figure).

10.3 Fences enclosing rear and side yards shall not exceed 2.4 m (8 ft) in height.

SECTION 11 LANDSCAPING AND SCREENING

11.1 The front yard (except for sidewalks and driveways) shall be landscaped to the satisfaction of the Development Officer. Landscaping may consist of any or all of the following:

(a) trees, shrubs, lawn, flowers;

(b) large feature rocks, field stone and other hard surface materials (Development Authority approval is required if this type of landscaping exceeds 25 percent of the total landscaped area);

(c) berming, terracing;

(d) innovative landscaping features;

(e) landscape ornaments;

(f) other features that may include, but not limited to, front walkways and steps.

11.2 In the case of corner lots, the minor street frontage shall also be landscaped to the satisfaction of the Development Officer.

11.3 No non-residential development in hamlets shall be allowed which may interfere with the amenity of adjacent residential areas in the hamlet and the Development Authority may require any use to be screened to minimize conflict between residential and non-residential land uses; or may refuse it if the potential conflict cannot be resolved.

SECTION 12 LAND SUITABILITY AND SERVICING REQUIREMENTS – See Schedule 4.

SECTION 13 STANDARDS OF DEVELOPMENT – See Schedule 5.

RURAL COMMERCIAL – RC

PURPOSE: *To provide for the location of commercial and light industrial uses in rural areas which will not compromise the use of agricultural lands for agriculture.*

SECTION 1 USES

1.1 **Permitted Uses**

Accessory building, structure or use
Additions to existing buildings
Contractor, limited
Office
Shipping container *(e)*
Sign, Category 1 *(e)*
Utilities *(e)*
Warehousing and storage, general

1.2 **Discretionary Uses – MPC**

Agricultural processing
Agricultural repair shop
Animal care service, large and small
Auction market
Auto repair and paint shop
Auto sales and service
Bar/lounge
Bulk fertilizer storage and sales
Bulk fuel storage and sales
Business support service
Cannabis production facility
Cannabis retail store
Car wash
Cardlock fuel dispensing facility
Commercial truck wash
Contractor, general
Crop spraying operation and facility
Drive-in restaurant
Entertainment establishment
Equipment sales, rental and service
Farm supply and service
Farm/industrial machinery sales, rental and service
Farmer's market
Fleet and transportation services 1 & 2
Freight terminal
Funeral home
Gas station

Discretionary Uses – DO

Sign, Category 2 & 3

Discretionary Uses – MPC (continued)
Hangar
Industrial, light
Intensive horticultural operation
Kennel, breeding
Liquor store
Livestock truck and trailer wash facility
Lumber yard/building supply store
Manufactured dwelling sales and service
Manufacturing and fabrications operation
Medical treatment services
Mini-storage facility
Motocross/motor sports park
Moved-in building
Museum
Mushroom farm
Oilfield contractor service
Oilfield/pipe equipment and storage
Outdoor storage
Pre-fabricated building manufacturer
Recreation facility
Recreational vehicle storage
Recycling facility
Religious assembly
Renewable energy, commercial/industrial
Renewable energy, individual
Residential use in conjunction with an approved commercial use
Restaurant
Retail
Sandblasting facility
Security suite
Shipping container
Shooting range
Sod farm
Truck stop
Truck transportation dispatch/depot
Warehousing and storage, industrial
Welding shop
Work camp, long term
Work camp, short term
Work/lay down camp

(e) means "Exempt" and development will not require a development permit if it meets all the provisions of this Bylaw and is in accordance with any applicable requirements in Schedule 3.

SECTION 2 MINIMUM LOT SIZE

2.1

Use	Width		Length		Area	
	m	ft.	m	ft.	m^2	ft^2
All uses	61.0	200	45.7	150	2,787.1	30,000

SECTION 3 MINIMUM SETBACK FROM PROPERTY LINES

3.1 All structures and buildings shall be setback 7.6 m (25 ft) from all property lines not fronting on or adjacent to a municipal roadway.

SECTION 4 MINIMUM SETBACKS FROM ROADS

4.1 No part of a building or structure shall be located within 38.1 m (125 ft) of the centre line of any public roadway which is not designated as a provincial highway under the *Highways Development and Protection Regulation*.

4.2 Any road designated as a provincial highway under the *Highways Development and Protection Regulation* is subject to setbacks as required by Alberta Transportation and any applications for development adjacent to a highway should be referred to Alberta Transportation for a Roadside Development Permit.

4.3 No part of any dugout, regardless of size, shall be located within 76.2 m (250 ft) of the right-of-way of a highway or public road.

4.4 Dugouts may be allowed closer to the centre line of a highway or public road if a barricade is installed along 100 percent of the length of that part of the dugout fronting the highway or public road and 25 percent of the length of the sides of the dugout.

SECTION 5 MINIMUM SETBACKS FROM IRRIGATION INFRASTRUCTURE

5.1 No part of a building or structure shall be located:

(a) within 10.0 m (33 ft) of the centreline of a Bow River Irrigation District (BRID) irrigation pipeline or 3.0 m (10 ft) of a registered right-of-way or easement for any irrigation pipeline or irrigation canal, whichever is greater;

(b) within 60.1 m (200 ft) from any BRID or Alberta Environment water reservoir measured from the water's edge at full supply level (FSL) or 30.5 m (100 ft) from the registered reservoir right-of-way, whichever is greater.

SECTION 6 ACCESSORY BUILDINGS

6.1 An accessory building shall not be used as a dwelling unit.

6.2 An accessory building shall be setback a minimum 3.0 m (10 ft) from the principal building and from all other structures on the same lot.

6.3 An accessory building shall not be located in a front yard or on an easement.

6.4 Where a structure is attached to the principal building on a site by a roof, an open or enclosed structure, a floor or foundation, it is to be considered a part of the principal building and is not an accessory building.

6.5 An accessory building shall only be constructed after the principal building has been constructed or the principal use established; except where the accessory building is used for agricultural purposes as outlined in Section 1.4(a) of Schedule 3.

SECTION 7 ACCESS

7.1 The municipality may, at the time of subdivision or development, require the developer to enter into an agreement for the construction or upgrade of any approach(es) necessary to serve the development area in accordance with County Design Guidelines.

7.2 To ensure proper emergency access, all developments shall have direct legal and physical access to a public roadway in accordance with County Design Guidelines. If the development is within 300 m (984.3 ft.) of a provincial highway, direct legal and physical access to a public roadway shall be to the satisfaction of Alberta Transportation.

7.3 The requirement for a service road or subdivision street to provide access may be imposed as a condition of subdivision approval for any new development. Survey and construction costs shall be the responsibility of the applicant.

SECTION 8 SITE COVERAGE

8.1 The maximum site coverage for all the permitted and discretionary uses listed above:

(a) principal and accessory buildings – 50 percent.

SECTION 9 MAXIMUM BUILDING HEIGHT

9.1 Principal building: 10.5 m (34.4 ft)

9.2 Accessory Building(s): 6.7 m (22 ft)

SECTION 10 LOADING AREA REQUIREMENTS

10.1 For commercial, industrial and other uses, there shall be a minimum of one off-street loading area, or more as required by the Development Authority.

10.2 Each loading area shall be designed in such a manner that it will not interfere with convenient and safe pedestrian movement, traffic flow or parking.

SECTION 11 LANDSCAPING, SCREENING AND LOCATION OF STORAGE

11.1 The outdoor display of goods, materials or equipment solely for advertisement purposes may be allowed, at the discretion of the Development Authority. The following shall apply to the outdoor storage of goods:

(a) shall not be stored in a front yard;

(b) refuse or garbage shall be kept in a suitably-sized container or enclosure, effectively screened and refuse and refuse containers shall be located in a rear yard.

SECTION 12 SERVICING REQUIREMENTS

12.1 Every development shall be required to install a sewage disposal system and potable water system to the satisfaction of the Development Authority and in accordance with any applicable County Design Guidelines. The Development Authority may refuse a development if the parcel on which it is proposed is not large enough to support a sewage disposal system to the standard required.

SECTION 13 FENCES

13.1 No fence, wall, hedge or any combination thereof, lying within 7.6 m (25 ft) of the right-of-way of a public roadway (excluding lanes) shall extend more than 0.9 m (3 ft) above the ground (except in the case of corner lots where one yard is considered as the side yard) unless permitted by the Development Authority (see Figure below).

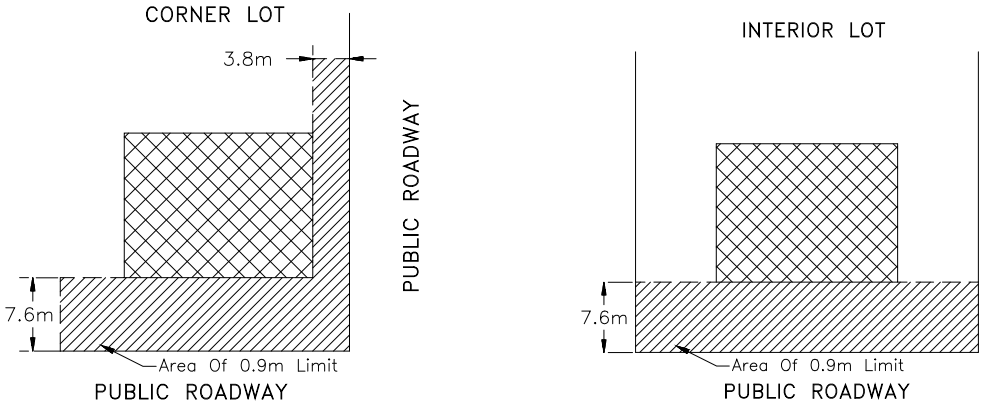

13.2 Fences enclosing rear and side yards shall not exceed 2.4 m (8 ft) in height.

SECTION 14 COMMERCIAL / BUSINESS DEVELOPMENT STANDARDS

14.1 No use shall be approved which may generate traffic problems within the district.

14.2 On parcels located adjacent to provincial highways, any storage of goods, products, raw materials, etc. shall be effectively screened from view by buildings, solid fences, landscaped features, or combinations thereof and be maintained in good repair.

14.3 Where any parcel or part of a parcel has frontage on a controlled provincial highway, special standards for setbacks, access, and service roadways may be required by the Development Authority in accordance with the recommendations and requirements of Alberta Transportation and the *Highways Development and Protection Regulation*.

14.4 Wrecked or damaged motor vehicles which might be located or stockpiled on the property must be screened from all adjacent parcels and roadways in the vicinity.

SECTION 15 USE RESTRICTIONS AND DEVELOPMENT REQUIREMENTS FOR DWELLING UNITS

15.1 Dwelling units or sleeping units may be approved as an accessory or secondary use to a permitted or discretionary use provided that:

(a) the dwelling or sleeping units are wholly contained within the principal commercial building;

(b) the dwelling or sleeping units, unless otherwise required by the Development Authority, are wholly contained in the second or upper storey or rear of the building; and

(c) the main floor commercial frontage is utilized for commercial use.

SECTION 16 USE RESTRICTIONS AND DEVELOPMENT REQUIREMENTS FOR SECURITY SUITES

16.1 Dwelling units or sleeping units may be approved as a security suite to a permitted or discretionary use provided that:

(a) the dwelling or sleeping units are wholly contained within the principal commercial building and are located in the second or upper storey or rear of the building and the main floor commercial frontage is utilized for commercial use; or

(b) the dwelling or sleeping units are contained in a separate structure no greater than 74.3 m^2 (800 ft^2).

SECTION 17 SERVICES, TRANSPORTATION AND UTILITY FACILITIES

17.1 No application to locate or expand a land use shall be approved unless, in the opinion of the Development Authority, the proposed use will not have a detrimental effect on any:

(a) transportation or communication system, including primary highways, secondary highways, railway, airport site or communication facility; or

(b) regionally significant services or utilities facilities, including irrigation works, pipelines and power transmission lines.

SECTION 18 LAND SUITABILITY AND SERVICING REQUIREMENTS – See Schedule 4.

SECTION 19 STANDARDS OF DEVELOPMENT – See Schedule 5.

VULCAN INDUSTRIAL PARK – VIP

PURPOSE: *To facilitate industrial and business/industrial type uses supported by urban services that are compatible with the nearby urban environment in the Town of Vulcan, supportive of the local and regional economies and consistent with the Vulcan County Industrial Park Area Structure Plan and the mutually adopted Intermunicipal Development Plan.*

SECTION 1 USES

1.1 **Permitted Uses**

Accessory building, structure or use
Additions to existing buildings
Agricultural operation
Contractor, limited
Industrial, light
Shipping container *(e)*
Sign, Category 1 *(e)*
Soft shelled building *(e)*
Utilities *(e)*

1.2 **Discretionary Uses – MPC**

Abattoir
Agricultural processing
Agricultural repair shop
Animal care service, large
Auction market
Auto repair and paint shop
Bulk fertilizer storage and sales
Bulk fuel storage and sales
Business support service
Cannabis production facility
Cardlock fuel dispensing facility
Commercial truck wash
Compost facility type 1
Contractor, general
Crop spraying operation and facility
Equipment sales, rental and service
Farm/industrial machinery sales, rental and service
Feed mills/Grain terminals
Fleet and transportation services 1 and 2
Freight terminal
Industrial, heavy
Livestock truck and trailer wash
Lumber yard/building supply store
Manufactured dwelling sales and service
Manufacturing and fabrication operation
Mini-storage facility
Mixed use development

Discretionary Uses – DO

Sign, Category 2 and 3

Discretionary Uses – MPC (continued)
Moved-in building
Office
Oilfield contractor services
Oilfield/pipe equipment and storage
Outdoor storage
Pre-fabricated building manufacturer
Recycling facility
Renewable energy, individual
Residential use in conjunction with an approved industrial use
Sandblasting facility
Security suite
Seed cleaning plant
Truck transportation dispatch/depot
Warehousing and storage, general
Warehousing and storage, industrial
Welding shop
Work camp, long term
Work camp, short term
Work/lay down camp

(e) means "Exempt" and development will not require a development permit if it meets all the provisions of this Bylaw and is in accordance with any applicable requirements in Schedule 3.

SECTION 2 MINIMUM LOT SIZE

2.1

Use	Width		Length		Area	
	m	ft.	m	ft.	m^2	ft^2
All uses	30.5	100	61.0	200	4,046.9	20,000

SECTION 3 MINIMUM SETBACK FROM PROPERTY LINES

3.1 The minimum yard setback for any building or structure shall be:

Use	Front Yard		Side Yard		Rear Yard	
	m	ft.	m	ft.	m	ft.
Principal buildings	9.1	30	3.0	10	7.6	25
Accessory buildings and structure	n/a	n/a	3.0	10	3.0	10

3.2 In the case of corner lots, a front yard setback of at least 9.1 m (30 ft.) shall be provided on one frontage and a secondary front yard setback of at least 3.8 m (12.5 ft.) shall be provided on the other frontage. Accessory buildings located to the rear of the principal building shall be setback at least 3.0 m (10 ft.) from a secondary front yard line.

SECTION 4 SITE COVERAGE

4.1 The maximum site coverage for all the permitted and discretionary uses listed above:

(a) principal and accessory buildings – 60 percent.

SECTION 5 ACCESS

5.1 Vehicular entrances and exits shall be designed in a manner that provides a safe and clearly defined circulation pattern.

5.2 Loading bays shall be located in such a manner as to not impede the efficient flow of traffic and to minimize impacts on adjacent land uses with the district.

SECTION 6 LOADING AREA REQUIREMENTS

6.1 There shall be a minimum of one off-street loading area, or more as required by the Development Officer.

6.2 Each loading area shall be designed in such a manner that it will not interfere with convenient and safe pedestrian movement, traffic flow or parking.

SECTION 7 DESIGN AND APPEARANCE OF BUILDINGS

7.1 Buildings shall be of a high calibre of design and shall utilize high quality building materials that are integrated into a comprehensive site design.

7.2 The main entry of the building must face the main access road and be prominently visible upon entering the site. The main entry is not permitted to be visually blocked by the storage or display of sale products.

7.3 All on-site lighting, including those in on-site parking lots, must be down lighting. The use of fixtures projecting light upwards is not permitted.

SECTION 8 ACCESSORY BUILDINGS

8.1 An accessory building shall not be used as a dwelling unit.

8.2 An accessory building shall be setback a minimum 3.0 m (10 ft) from the principal building and from all other structures on the same lot.

8.3 An accessory building shall not be located in a front yard or on an easement.

8.4 Where a structure is attached to the principal building on a site by a roof, an open or enclosed structure, a floor or foundation, it is to be considered a part of the principal building and is not an accessory building.

8.5 An accessory building shall only be constructed after the principal building has been constructed or the principal use established; except where the accessory building is used for agricultural purposes as outlined in Section 1.4(a) of Schedule 3.

SECTION 9 LANDSCAPING

9.1 A professionally prepared landscaping plan shall be required to be submitted with all new development permit applications for principal uses.

9.2 Landscaping shall be provided on all street frontages and shall be of a quality and extent necessary to support quality development.

9.3 Trees are required as part of a landscaping plan and shall be provided at the minimum ratio of one (1) tree per 65 m² (700 ft. ²) of landscaped area provided, with not less than one (1) tree per lot.

9.4 All required landscaping shall be maintained in perpetuity and kept in an attractive and tidy manner.

9.5 The parking, storage or display of goods, materials, equipment or vehicles is not allowed on a required landscaping area.

SECTION 10 OUTDOOR STORAGE & DISPLAY AREAS

10.1 The outdoor storage of goods, materials or equipment is allowable at the discretion of the Development Authority provided that storage shall be kept in a neat and orderly manner and/or suitably enclosed by a fence or wall or screened with landscaping and the following shall apply:

(a) shall not be stored in a front yard or secondary front yard area;

(b) refuse or garbage shall be kept in a suitably-sized container or enclosure, effectively screened and refuse and refuse containers shall be located in a rear yard;

(c) the storage of wrecked or damaged motor vehicles, machinery, building materials, waste materials and other items on a parcel shall not be allowed unless approved by the Development Authority, kept in a neat and orderly manner and/or effectively screened from all adjacent parcels and roadways in the vicinity.

10.2 The outdoor display of goods, materials or equipment solely for advertisement purposes may be allowed at the discretion of the Development Authority.

SECTION 11 INDUSTRIAL USE DEVELOPMENT STANDARDS

11.1 No use shall be approved which may generate traffic problems within the district.

11.2 Industrial land uses that generate a noise, odour, risk of toxic emissions, fire or explosion hazard, or unsightly appearance that is, in the view of the Development Authority, incompatible with land uses in the Town of Vulcan or elsewhere in proximity to the subject site, shall not be allowed.

SECTION 12 USE RESTRICTIONS & DEVELOPMENT REQUIREMENTS FOR SUPPLEMENTARY RESIDENTIAL UNITS

12.1 Dwelling units or sleeping units may be approved as a supplementary use to a permitted or discretionary use provided that:

(a) the dwelling or sleeping units are wholly contained within the principal industrial building and are located in the second or upper storey or rear of the building and the main floor frontage is utilized for the principal use; or

(b) the dwelling or sleeping units are contained in a separate structure no greater than 55.7 m^2 (600 ft^2).

SECTION 13 USE RESTRICTIONS & DEVELOPMENT STANDARDS FOR ABATTOIRS

13.1 An Abattoir shall only be approved where the use is of a size and intensity compatible with adjacent land uses and where it has been demonstrated that nuisance generated from the use has been mitigated to the extent that the use is compatible with adjacent land uses.

13.2 The Development Authority may establish a size threshold on the number of animals being stored and/or processed, along with any other conditions to ensure suitability of the use.

SECTION 14 SIGNAGE

14.1 In addition to the signage requirements in Schedule 5, all signage shall be of a high design standard in accordance with the following considerations:

(a) architectural integration of the sign design and style into the broader site concept for the principal building;

(b) provision of professional design and construction for the sign; and

(c) utilization of high quality construction materials that facilitate longevity.

14.2 Not more than two Category 2 signs per parcel are allowed.

SECTION 15 FENCES

15.1 No fence, wall, hedge or any combination thereof, lying within 9.1 m (30 ft) of the right-of-way of a public roadway (excluding lanes) shall extend more than 0.9 m (3 ft) above the ground (except in the case of corner lots where one yard is considered as the side yard) unless permitted by the Development Authority (see Figure below). A fence that exceeds 0.9 m (3 ft.) in a front yard may be approved by the Development Officer.

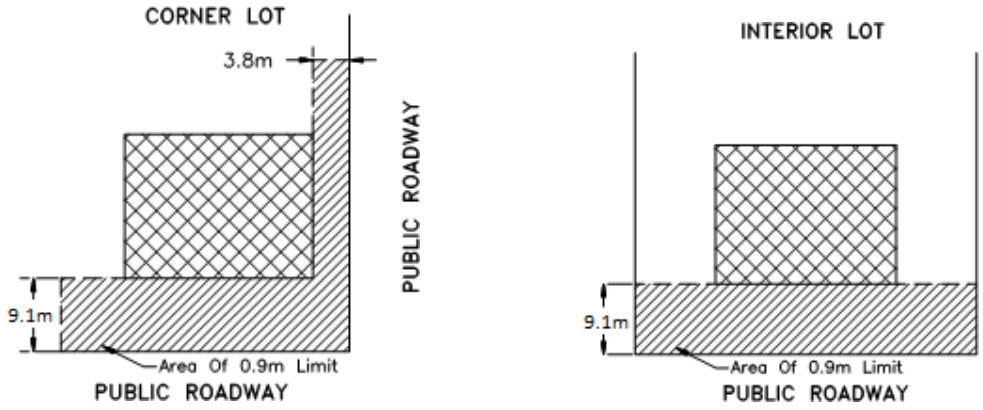

15.2 Fences enclosing rear and side yards shall not exceed 2.4 m (8 ft) in height.

15.3 All fencing shall be of high quality, permanent materials designed for the purposes of fencing.

15.4 The use of barbed wire below a height of 1.8 m (6 ft.) is not permitted. A maximum of 0.6 m (2 ft.) of barbed wire above the 2.4 m (8 ft.) fence height may be permitted at the discretion of the Development Officer. The use of razor wire is not permitted.

SECTION 16 LAND SUITABILITY AND SERVICING REQUIREMENTS – See Schedule 4.

SECTION 17 STANDARDS OF DEVELOPMENT – See Schedule 5.

RURAL INDUSTRIAL – RI

PURPOSE: *To allow industrial uses to be located in rural areas provided they do not pose a threat to the environment or create a potential nuisance for residents.*

SECTION 1 USES

1.1 **Permitted Uses**

Accessory building, structure or use
Additions to existing buildings
Contractor, limited
Industrial, light
Office
Shipping container *(e)*
Sign, Category 1 *(e)*
Soft shelled building *(e)*
Utilities *(e)*
Warehousing and storage, general

1.2 **Discretionary Uses – MPC**

Abattoir
Agricultural processing
Agricultural repair shop
Airport
Airstrip
Anhydrous ammonia storage/facility
Animal care service, large
Auction market
Auto recycling and salvage yard
Auto repair and paint shop
Auto sales and service
Bulk fertilizer storage and sales
Bulk fuel storage and sales
Business support service
Cannabis production facility
Cardlock fuel dispensing facility
Commercial truck wash
Compost facility type 1 and type 2
Contractor, general
Crop spraying operation and facility
Data Processing Operation
Farm/industrial machinery sales, rental and service
Feed mills/Grain terminals
Fleet and transportation services 1 and 2
Freight terminal
Hangar
Industrial, heavy

Discretionary Uses – DO

Sign, Category 2 and 3

Discretionary Uses – MPC (continued)
Livestock truck and trailer wash
Lumber yard/building supply store
Manufactured dwelling sales and service
Manufacturing and fabrication operation
Mini-storage facility
Moved-in building
Natural resource extraction and processing
Oilfield contractor services
Oilfield/pipe equipment and storage
Outdoor storage
Pre-fabricated building manufacturer
Recycling facility
Renewable energy, commercial/industrial
Renewable energy, individual
Residential use in conjunction with an approved industrial use
Retail
Sandblasting facility
Seed cleaning plant
Security suite
Truck transportation dispatch/depot
Warehousing and storage, industrial
Waste management site
Welding shop
Work camp, long term
Work camp, short term
Work/lay down camp

(e) means "Exempt" and development will not require a development permit if it meets all the provisions of this Bylaw and is in accordance with any applicable requirements in Schedule 3.

SECTION 2 MINIMUM LOT SIZE

2.1

Use	Width		Length		Area	
	m	ft.	m	ft.	m^2	ft^2
All uses	61.0	200	66.4	218	4,046.9	43,560

SECTION 3 MINIMUM SETBACK FROM PROPERTY LINES

3.1 All structures and buildings shall be setback 7.6 m (25 ft) from all property lines not fronting on or adjacent to a municipal roadway.

SECTION 4 MINIMUM SETBACKS FROM ROADS

4.1 No part of a building or structure shall be located within 38.1 m (125 ft) of the centre line of any public roadway which is not designated as a provincial highway under the *Highways Development and Protection Regulation*.

4.2 Any road designated as a provincial highway under the *Highways Development and Protection Regulation* is subject to setbacks as required by Alberta Transportation and any applications for development adjacent to a highway should be referred to Alberta Transportation for a Roadside Development Permit.

4.3 No part of any dugout, regardless of size, shall be located within 76.2 m (250 ft) of the right-of-way of a highway or public road.

4.4 Dugouts may be allowed closer to the centre line of a highway or public road if a barricade is installed along 100 percent of the length of that part of the dugout fronting the highway or public road and 25 percent of the length of the sides of the dugout.

SECTION 5 MINIMUM SETBACKS FROM IRRIGATION INFRASTRUCTURE

5.1 No part of a building or structure shall be located:

(a) within 10.0 m (33 ft) of the centreline of a Bow River Irrigation District (BRID) irrigation pipeline or 3.0 m (10 ft) of a registered right-of-way or easement for any irrigation pipeline or irrigation canal, whichever is greater;

(b) within 60.1 m (200 ft) from any BRID or Alberta Environment water reservoir measured from the water's edge at full supply level (FSL) or 30.5 m (100 ft) from the registered reservoir right-of-way, whichever is greater.

SECTION 6 ACCESSORY BUILDINGS

6.1 An accessory building shall not be used as a dwelling unit.

6.2 An accessory building shall be setback a minimum 3.0 m (10 ft) from the principal building and from all other structures on the same lot.

6.3 An accessory building shall not be located in a front yard or on an easement.

6.4 Where a structure is attached to the principal building on a site by a roof, an open or enclosed structure, a floor or foundation, it is to be considered a part of the principal building and is not an accessory building.

6.5 An accessory building shall only be constructed after the principal building has been constructed or the principal use established; except where the accessory building is used for agricultural purposes as outlined in Section 1.4(a) of Schedule 3.

SECTION 7 ACCESS

7.1 The municipality may, at the time of subdivision or development, require the developer to enter into an agreement for the construction or upgrade of any approach(es) necessary to serve the development area in accordance with County Design Guidelines.

7.2 To ensure proper emergency access, all developments shall have direct legal and physical access to a public roadway in accordance with County Design Guidelines. If the development is within 300 m (984.3 ft.) of a provincial highway, direct legal and physical access to a public roadway shall be to the satisfaction of Alberta Transportation.

7.3 The requirement for a service road or subdivision street to provide access may be imposed as a condition of subdivision approval for any new development. Survey and construction costs shall be the responsibility of the applicant.

SECTION 8 SITE COVERAGE

8.1 The maximum site coverage for all the permitted and discretionary uses listed above:

(a) principal and accessory buildings – 50 percent.

SECTION 9 LOADING AREA REQUIREMENTS

9.1 For all industrial uses, there shall be a minimum of one off-street loading area, or more as required by the Development Officer.

9.2 Each loading area shall be designed in such a manner that it will not interfere with convenient and safe pedestrian movement, traffic flow or parking.

SECTION 10 LANDSCAPING, SCREENING AND LOCATION OF STORAGE

10.1 The outdoor display of goods, materials or equipment solely for advertisement purposes may be allowed, at the discretion of the Development Authority, and the following shall apply:

(a) shall not be stored in a front yard;

(b) refuse or garbage shall be kept in a suitably-sized container or enclosure, effectively screened and refuse and refuse containers shall be located in a rear yard.

SECTION 11 FENCES

11.1 No fence, wall, hedge or any combination thereof, lying within 7.6 m (25 ft) of the right-of-way of a public roadway (excluding lanes) shall extend more than 0.9 m (3 ft) above the ground (except in the case of corner lots where one yard is considered as the side yard) unless permitted by the Development Authority (see Figure below).

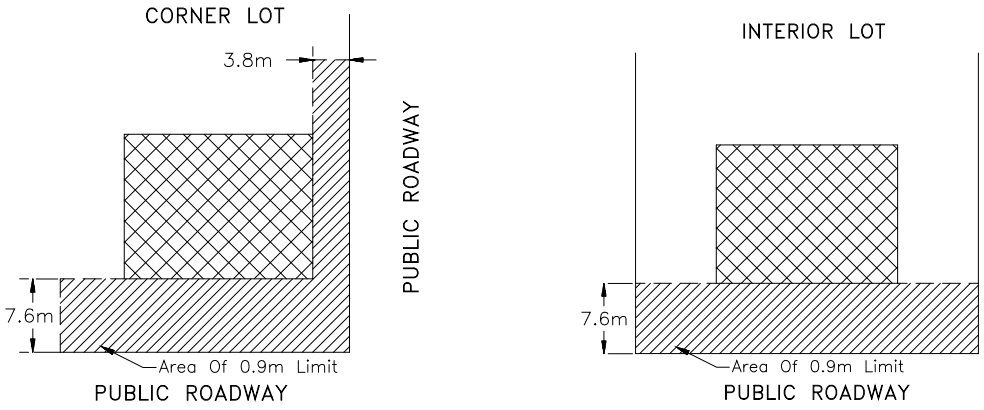

11.2 Fences enclosing rear and side yards shall not exceed 2.4 m (8 ft) in height.

SECTION 12 INDUSTRIAL USE DEVELOPMENT STANDARDS

12.1 No use shall be approved which may generate traffic problems within the district.

12.2 On parcels located adjacent to provincial highways, any storage of goods, products, raw materials, etc. shall be effectively screened from view by buildings, solid fences, landscape features, or combinations thereof and be maintained in good repair.

12.3 Where any parcel or part of a parcel has frontage on a controlled provincial highway, special standards for setbacks, access, and service roadways may be required by the Development Authority in accordance with the recommendations and requirements of Alberta Transportation and the *Highways Development and Protection Regulation*.

12.4 Wrecked or damaged motor vehicles which might be located or stockpiled on the property must be screened from all adjacent parcels and roadways in the vicinity.

12.5 Where it appears that additional side yard setbacks may be necessary, the Development Authority may impose such a requirement as a condition of a development permit.

SECTION 13 INDUSTRIAL SITING STANDARDS

13.1 A proposed grouped industrial development or an isolated industrial development considered by the Development Authority to be potentially hazardous, unsightly or offensive should not be approved within 1.6 km (1 mile) of:

(a) an incorporated urban municipality;

(b) a hamlet;

(c) a provincial, regional, municipal park or recreation area;

(d) an environmentally significant area;

(e) an existing or approved rural residence.

13.2 The above restrictions also apply:

(a) within 152.4 m (500 ft) of either side of a provincial highway or a designated scenic, tourist or recreational access road as established in a Vulcan County bylaw;

(b) within such distance of other roads as established by any Vulcan County bylaw;

(c) adjacent to a water body.

13.3 Applications for development expansion or for separate parcels in an area designated for industrial may be approved or recommended for approval provided that:

(a) the area of any proposed parcel is a minimum of 0.4 ha (1 acre);

(b) the proposed development or parcel will be serviced to the satisfaction of the Development Authority;

(c) the proposed use or operation will be developed in such a manner that no run-off water can directly enter any water body, groundwater, irrigation system or public roadway ditch;

(d) there will be adequate provision for water treatment, temporary waste storage facilities and arrangements for waste disposal in accordance with standards set by the appropriate provincial departments and other approving authorities.

SECTION 14 SERVICES, TRANSPORTATION AND UTILITY FACILITIES

14.1 No application to locate or expand a land use shall be approved unless, in the opinion of the Development Authority, the proposed use will not have a detrimental effect on any:

(a) transportation or communication system, including primary highways, secondary highways, railway, airport site or communication facility; or

(b) regionally significant services or utilities facilities, including irrigation works, pipelines and power transmission lines.

14.2 Any application for development located in the vicinity of a sour gas pipeline shall be circulated to the Alberta Energy Regulator (AER) for comments.

SECTION 15 USE RESTRICTIONS AND DEVELOPMENT REQUIREMENTS FOR SECURITY SUITES

15.1 Dwelling units or sleeping units may be approved as a security suite to a permitted or discretionary use provided that:

(a) the dwelling or sleeping units are wholly contained within the principal commercial industrial building and are located in the second or upper storey or rear of the building and the main floor frontage is utilized for the principal use; or

(b) the dwelling or sleeping units are contained in a separate structure no greater than 74.3 m^2 (800 ft^2).

SECTION 16 LAND SUITABILITY AND SERVICING REQUIREMENTS – See Schedule 4.

SECTION 17 STANDARDS OF DEVELOPMENT – See Schedule 5.

RURAL RECREATIONAL – RR

PURPOSE: *To provide for the development of both public and private/commercial recreational uses at selective locations within the County. This district may be used to conserve, enhance and expand the County's recreational resources, without compromising agricultural activities or the municipality's environmentally significant features and areas.*

SECTION 1 USES

1.1 **Permitted Uses**

Accessory building, structure or use
Additions to existing buildings
Sign, Category 1 *(e)*
Soft shelled building *(e)*
Utilities *(e)*

1.2 **Discretionary Uses – MPC**

Boat launch
Campground
Driving range
Entertainment establishment
Exhibition centre
Golf course
Manufactured dwelling park/community
Marina
Mixed use development
Motocross/motor sports park
Parking areas and structures
Parks and playgrounds
Public building or use
Public day use area
Recreation facility
Recreational vehicle park
Recreational vehicle storage
Renewable energy, individual
Restaurant
Retail
Riding stable/arena
Rodeo grounds
Security suite
Shipping container
Shooting range

Discretionary Uses – DO

Moved-in building
Moved-in dwelling
Park model recreational unit
Sign, Category 2 and 3

(e) means "Exempt" and development will not require a development permit if it meets all the provisions of this Bylaw and is in accordance with any applicable requirements in Schedule 3.

SECTION 2 MINIMUM LOT SIZE

2.1 Existing parcels or as required by the Municipal Planning Commission.

SECTION 3 MINIMUM SETBACK FROM PROPERTY LINES

3.1 All structures and buildings shall be setback 7.6 m (25 ft) from all property lines not fronting on or adjacent to a municipal roadway.

SECTION 4 MINIMUM SETBACKS FROM ROADS

4.1 No part of a building or structure shall be located within 38.1 m (125 ft) of the centre line of any public roadway which is not designated as a provincial highway under the *Highways Development and Protection Regulation*.

4.2 Any road designated as a provincial highway under the *Highways Development and Protection Regulation* is subject to setbacks as required by Alberta Transportation and any applications for development adjacent to a highway should be referred to Alberta Transportation for a Roadside Development Permit.

4.3 No part of any dugout, regardless of size, shall be located within 76.2 m (250 ft) of the right-of-way of a highway or public road.

4.4 Dugouts may be allowed closer to the centre line of a highway or public road if a barricade is installed along 100 percent of the length of that part of the dugout fronting the highway or public road and 25 percent of the length of the sides of the dugout.

SECTION 5 ACCESSORY BUILDINGS

5.1 An accessory building shall not be used as a dwelling unit.

5.2 An accessory building shall be setback a minimum 3.0 m (10 ft) from the principal building and from all other structures on the same lot.

5.3 An accessory building shall not be located in a front yard or on an easement.

5.4 Where a structure is attached to the principal building on a site by a roof, an open or enclosed structure, a floor or foundation, it is to be considered a part of the principal building and is not an accessory building.

5.5 For campgrounds and recreational vehicle (RV) parks, individual accessory buildings or structures shall not exceed 37.2 m^2 (400 ft^2) in size and 4.6 m (15 ft) in height.

5.6 An accessory building shall only be constructed after the principal building has been constructed or the principal use established; except where the accessory building is used for agricultural purposes as outlined in Section 1.4(a) of Schedule 3.

SECTION 6 MAXIMUM LOT COVERAGE

6.1 The maximum site coverage for all the permitted and discretionary uses listed above:

(a) as determined by the Development Authority.

SECTION 7 CONCEPTUAL SCHEME

7.1 The Development Authority may require a professionally prepared conceptual scheme as part of the development permit application.

7.2 The Development Authority may require, as a condition of approval, that the conceptual scheme forms part of the approval and shall not be deviated from without the authorization of the Development Authority.

SECTION 8 AREA STRUCTURE PLANS

8.1 The Development Authority may require the preparation of an area structure plan in accordance with Schedule 4(3) prior to considering an application.

SECTION 9 ACCESS

9.1 The municipality may, at the time of subdivision or development, require the developer to enter into an agreement for the construction or upgrade of any approach(es) necessary to serve the development area in accordance with County Design Guidelines.

9.2 To ensure proper emergency access, all developments shall have direct legal and physical access to a public roadway in accordance with County Design Guidelines. If the development is within 300 m (984.3 ft.) of a provincial highway, direct legal and physical access to a public roadway shall be to the satisfaction of Alberta Transportation.

9.3 The requirement for a service road or subdivision street to provide access may be imposed as a condition of subdivision approval for any new development. Survey and construction costs shall be the responsibility of the applicant.

SECTION 10 SERVICING REQUIREMENTS

10.1 Every development shall be required to install a sewage disposal system and potable water system to the satisfaction of the Development Authority and in accordance with any applicable County Design Guidelines. The Development Authority may refuse a development if the parcel on which it is proposed is not large enough to support a sewage disposal system to the standard required.

SECTION 11 FENCES

11.1 No fence, wall, hedge or any combination thereof, lying within 7.6 m (25 ft) of the right-of-way of a public roadway (excluding lanes) shall extend more than 0.9 m (3 ft) above the ground (except in the case of corner lots where one yard is considered as the side yard) unless permitted by the Development Authority (see Figure below).

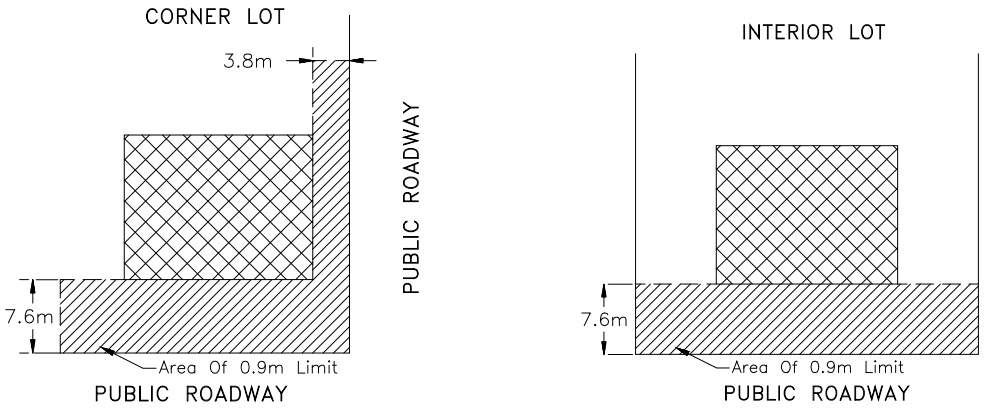

11.2 Fences enclosing rear and side yards shall not exceed 2.4 m (8 ft) in height.

SECTION 12 PARK MODELS RECREATIONAL UNITS

12.1 The Development Authority shall only issue a development permit for a park model recreational unit if, in its opinion, the unit is to only be used for seasonal residential and/or recreational use.

12.2 The Development Authority may, as a condition of development permit, limit or prohibit the type or extent of certain service connections that may be connected to a park model recreational unit in order to ensure that the unit is only to be used for seasonal use.

SECTION 13 LAND SUITABILITY AND SERVICING REQUIREMENTS – See Schedule 4.

SECTION 14 STANDARDS OF DEVELOPMENT – See Schedule 5.

RESERVOIR VICINITY – RV

PURPOSE: *To allow agricultural and non-agricultural uses to meet increasing pressures for development, where appropriate, without compromising the irrigation function and ecological significance of the reservoirs located within Vulcan County.*

SECTION 1 USES

1.1 **Permitted Uses**

Accessory building, structure or use
Additions to existing buildings
Agricultural building *(e)*
Agricultural operation *(e)*
Extensive agriculture *(e)*
Home occupation 1 *(e)*
Manufactured dwellings 1
Modular dwellings 1 and 2
Moved-in building
Moved-in dwelling
Ready-to-move dwelling
Shipping container *(e)*
Short-Term Rental 1
Sign, Category 1 *(e)*
Sign, Category 2
Single detached dwelling
Utilities *(e)*

1.2 **Discretionary Uses – MPC**

Abattoir
Animal care service, small and large
Cemetery and interment services
Child care facility
Community hall
Duplex
Intensive horticultural operation
Kennel, breeding
Meteorological tower
Mushroom farm
Public building or use
Religious assembly
Renewable energy, individual
Riding stable/arena
School
Short-Term Rental 2
Stripping and sale of topsoil

Discretionary Uses – DO

Dwelling unit, combined
Home occupation 2
Manufactured dwelling 2
Second dwelling unit
Secondary suite
Sign, Category 2 and 3

(e) means "Exempt" and development will not require a development permit if it meets all the provisions of this Bylaw and is in accordance with any applicable requirements in Schedule 3.

SECTION 2 PARCEL AND LOT SIZE

2.1 A minimum lot size of 0.4 ha (1 acre) is recommended for any permitted or discretionary use. This may be varied by the Municipal Planning Commission to reasonably accommodate the proposed use. Parcels and lot sizes for all land uses shall be determined by the Municipal Planning Commission. The following parcel sizes apply to the uses listed below.

2.2 Extensive Agriculture

(a) existing parcels;

(b) 64.8 ha (160 acres) or an unsubdivided quarter section.

2.3 Farmsteads

(a) existing parcels;

(b) flexible maximum based on farmstead definition.

2.4 Vacant Country Residential

(a) existing parcels;

(b) minimum of 0.4 ha (1 acre);

(c) maximum of 1.2 ha (3 acres).

SECTION 3 DENSITY

3.1 The maximum number of parcels allowed on an unsubdivided quarter section of land shall be two, unless a redesignation process is undertaken and approved.

SECTION 4 RESERVOIR MATTERS

4.1 The Development Authority shall have regard for the *Reservoir Lands Guideline* (Alberta Environment, 2015) in evaluating subdivision and development proposals.

SECTION 5 MINIMUM SETBACK FROM PROPERTY LINES

5.1 All structures and buildings shall be setback 7.6 m (25 ft) from all property lines not fronting on or adjacent to a municipal roadway.

SECTION 6 MINIMUM SETBACKS FROM ROADS

6.1 No part of a building or structure shall be located within 38.1 m (125 ft) of the centre line of any public roadway which is not designated as a provincial highway under the *Highways Development and Protection Regulation*.

6.2 Any road designated as a provincial highway under the *Highways Development and Protection Regulation* is subject to setbacks as required by Alberta Transportation and any applications for development adjacent to a highway should be referred to Alberta Transportation for a Roadside Development Permit.

6.3 No part of any dugout, regardless of size, shall be located within 76.2 m (250 ft) of the right-of-way of a highway or public road.

6.4 Dugouts may be allowed closer to the centre line of a highway or public road if a barricade is installed along 100 percent of the length of that part of the dugout fronting the highway or public road and 25 percent of the length of the sides of the dugout.

SECTION 7 MINIMUM SETBACKS FROM IRRIGATION INFRASTRUCTURE

7.1 No part of a building or structure shall be located:

(a) within 10.0 m (33 ft) of the centreline of a Bow River Irrigation District (BRID) irrigation pipeline or 3.0 m (10 ft) of a registered right-of-way or easement for any irrigation pipeline or irrigation canal, whichever is greater;

(b) within 60.1 m (200 ft) from any BRID or Alberta Environment water reservoir measured from the water's edge at full supply level (FSL) or 30.5 m (100 ft) from the registered reservoir right-of-way, whichever is greater.

SECTION 8 MINIMUM FLOOR AREA REQUIREMENT

8.1 The minimum floor area of the principal dwelling shall not be less than 74.3 m^2 (800 ft^2), not including multi-unit dwellings.

SECTION 9 ACCESS

9.1 The municipality may, at the time of subdivision or development, require the developer to enter into an agreement for the construction or upgrade of any approach(es) necessary to serve the development area in accordance with County Design Guidelines.

9.2 To ensure proper emergency access, all developments shall have direct legal and physical access to a public roadway in accordance with County Design Guidelines. If the development is within 300 m (984.3 ft.) of a provincial highway, direct legal and physical access to a public roadway shall be to the satisfaction of Alberta Transportation.

9.3 The requirement for a service road or subdivision street to provide access may be imposed as a condition of subdivision approval for any new development. Survey and construction costs shall be the responsibility of the applicant.

SECTION 10 ACCESSORY BUILDINGS

10.1 An accessory building shall not be used as a dwelling unit except where approval is granted for a Dwelling Unit, Combined.

10.2 An accessory building shall be setback a minimum 3.0 m (10 ft) from the principal dwelling and from all other structures on the same lot.

10.3 Where a structure is attached to the principal building on a site by a roof, an open or enclosed structure, a floor or foundation, it is to be considered a part of the principal building and is not an accessory building.

10.4 An accessory building shall only be constructed after the principal building has been constructed or the principal use established; except where the accessory building is used for agricultural purposes as outlined in Section 1.4(a) of Schedule 3.

SECTION 11 FENCES AND SHELTERBELTS

11.1 Agricultural fences constructed of rails, stakes, strung wire, or similar material with more than 85 percent of their surface area open for free passage of light and air may be located along the property boundaries of any agricultural parcel and are not subject to the 38.1 m (125 ft) setback from municipal roads or the required setbacks for the land use district.

11.2 Fences used as an enclosure, barrier, boundary, means of protection, privacy screening or confinement constructed of any allowable material (wood, stone/brick, metal, or plastic) with less than 85 percent of their surface area open for free passage of light must be located outside the required setbacks for the land use district and shall not exceed 2.4m (8 ft.) in height.

11.3 In rural areas along municipal roads, the construction or erection of a fence, hedge or shelterbelt shall comply with the following:

(a) no fence, hedge, tree or shelterbelt shall be erected which would unduly restrict the vision of approaching traffic; and

(b) no fence, hedge, tree or shelterbelt under Section 11.2 shall be erected closer than 7.6 m (25 ft) of the right-of-way of a municipal road. This provision shall not apply to existing yardsites developed before the passing of this Bylaw.

SECTION 12 SERVICING REQUIREMENTS

12.1 Every development shall be required to install a sewage disposal system and potable water system to the satisfaction of the Development Authority and in accordance with any applicable County Design Guidelines. The Development Authority may refuse a development if the parcel on which it is proposed is not large enough to support a sewage disposal system to the standard required.

SECTION 13 SUBDIVISION

General

13.1 The Municipal Planning Commission may only approve one subdivision on an unsubdivided quarter section within the Reservoir Vicinity – RV district. The Municipal Planning Commission may consider a quarter section to be unsubdivided if previous subdivisions were for the purpose of:

(a) public or quasi-public use;

(b) the parcel meets the requirements of 12.4, Agricultural Uses;

(c) the parcel meets the requirements of 12.6, Cut-Off or Fragmented Agricultural Parcel; or

(d) the parcel meets the requirements of 12.9, Subdivision of Existing Small Titles.

Agricultural Uses

13.2 A subdivision for an intensive horticultural use may be treated as an agricultural use and may be permitted as one of the allowable subdivisions from a quarter section.

13.3 The Municipal Planning Commission shall not approve an application for subdivision of a parcel on which an existing or proposed confined feeding operation (CFO) is located.

13.4 The creation of large agricultural parcels will be considered on a case-by-case basis and may include the following:

(a) the creation of a 32.4 ha (80 acre) parcel provided there is a minimum residual parcel size of 28.3 ha (70 acres); or

(b) logical divisions based on topography or other conditions at the discretion of the Municipal Planning Commission.

13.5 A parcel created pursuant to the above policy or previous provincial policies may be eligible for the subdivision of an existing farmstead or vacant parcel provided that the proposal is consistent with the requirements established for single lot parcels in 12.10 and 12.11.

Existing Agricultural Parcels

13.6 The enlargement, reduction or realignment of an existing separate parcel may be approved provided that:

(a) the additional lands required are to accommodate existing or related improvements; or

(b) the proposal is to rectify or rationalize existing habitation, occupancy, cultivation or settlement patterns; and

(c) no additional parcels are created over and above those presently in existence;

(d) the proposed new lot and the proposed residual lot will continue to have direct legal and physical access to a public roadway, adequate development setbacks, and a suitable building site; and

(e) the size, location and configuration of the proposed lot will not significantly affect any irrigation or transportation system in the area nor the urban expansion strategies of neighbouring municipalities.

Cut-Off or Fragmented Agricultural Parcel

13.7 Subdivision of an undeveloped or developed cut-off parcel may be approved if:

(a) the proposed lot is separated from the residual by:

(i) a registered exception from the title,

(ii) a feature that creates a significant physical barrier to use of both sides as a unit;

(b) the proposed lot has legal access;

(c) neither the proposed lot or the residual parcel are occupied by a confined feeding operation.

13.8 A parcel created pursuant to the provisions of the above policy or previous provincial policies may be eligible for the subdivision of an existing farmstead or vacant parcel provided that the proposal is consistent with the requirements established for single lot parcels in 12.10 and 12.11 and the residual of the fragmented parcel must be at least 1.2 ha (3 acres) in size.

Subdivision of Existing Small Titles

13.9 An existing title of land that is 16.2 ha (40 acres) or less but greater than 2.4 ha (6 acres) may be divided into two parcels if:

(a) both parcels can accommodate joint access to a public road; and

(b) the subdivision does not propose to create more than four titles per quarter.

Single Lot Developed Farmstead

13.10 A subdivision that proposes to create a single parcel containing a developed residence or farmstead may be approved provided that:

(a) the proposed parcel is to be subdivided from a previously unsubdivided quarter section compliant with the farmstead definition with a flexible maximum parcel size based on the improvements;

(b) **Farmstead** means a part of a parcel that:

(i) is presently or was formerly used as a single detached dwelling;

(ii) is further developed with agricultural buildings such as quonsets and grain bins, accessory buildings, structures such as corrals, storage compounds and/or storage or areas used for farm machinery, produce and fertilizer, dugout and/or water well or municipal rural water and septic system;

(iii) is of a compact size and physically defined by topography, shelterbelts or other physical characteristics;

(iv) does not include any cultivated farmland or lands suitable for agricultural production unless included within a shelter belt and/or physically defined area. Fencing alone shall not constitute a physically defined area if it encompasses agricultural land or hazard lands that are not necessary for the habitation of the proposed subdivision and that may be left with the larger agricultural parcel unless impractical to do so; limited pasture land used for grazing of animals may be included where the lands are part of a developed yard site; and

(c) the proposed lot on which the dwelling is located and the proposed residual parcel have direct legal and/or physical access to a public roadway;

(d) the access is satisfactory to Alberta Transportation where the access is onto or in close proximity to a primary highway;

(e) the size and location of the proposed lot will not significantly affect any irrigation system in the area;

(f) the dwelling unit located on the proposed parcel can meet or exceed the minimum distance separation (MDS) requirements from an existing confined feeding operation, as established in the *Agricultural Operation Practices Act, Standards and Administration Regulation*; and

(g) the residual parcel size after subdivision is to be flexible based on the proposal for subdivision.

Single Lot Vacant

13.11 A subdivision which proposes to create a single vacant parcel may be approved provided that:

(a) the proposed parcel to be created is a maximum of 1.2 ha (3.0 acres) in size;

(b) the proposed single residential lot contains, in the opinion of the Municipal Planning Commission, a buildable site;

(c) the proposed single residential lot can be serviced to the satisfaction of the Municipal Planning Commission;

(d) the development on the proposed single residential lot will not, in the opinion of the Municipal Planning Commission, inhibit public access to or otherwise have a detrimental effect on agriculture or the recreational use of a river valley, water body, environmentally sensitive area or special scenic location;

(e) the proposed lot and the residual parcel both have direct legal and physical access to a public roadway;

(f) the access is satisfactory to Alberta Transportation where the access is onto or in close proximity to a primary highway; and

(g) the size and location of the proposed lot will not significantly affect any irrigation system in the area.

Public and Institutional Uses

13.12 A subdivision application for public or institutional uses may be recommended for approval if:

(a) the Municipal Planning Commission is satisfied that suitable, existing alternative parcels are not reasonably available in another land use district;

(b) the legal and physical access, including access to the residual agricultural lot, satisfies Alberta Transportation, in the case of a provincial highway or the Municipal Planning Commission in the case of municipal roads;

(c) the Municipal Planning Commission is satisfied that the use is primary, suitable, serviceable and will be developed as proposed; and

(d) where already functioning, the application encompasses the developed site only.

13.13 The conversion of small parcels established for public or institutional purposes to other uses should be limited to those developments which, in the opinion of the Municipal Planning Commission, are considered appropriate and compatible with surrounding uses.

SECTION 14 LAND SUITABILITY AND SERVICING REQUIREMENTS – See Schedule 4.

SECTION 15 STANDARDS OF DEVELOPMENT – See Schedule 5.

URBAN FRINGE – UF

PURPOSE: *To protect the agricultural land base of the municipality and ensure the fringe areas of urban municipalities are protected for future expansion and development while allowing non-agricultural uses that complement the area's economy and do not conflict with an urban environment.*

SECTION 1 USES

1.1 **Permitted Uses**

Accessory building, structure or use
Additions to existing buildings
Agricultural building *(e)*
Agricultural operation *(e)*
Extensive agriculture *(e)*
Home occupation 1 *(e)*
Manufactured dwelling 1
Modular dwelling 1 and 2
Ready-to-move dwelling
Shipping container *(e)*
Short-Term Rental 1
Sign, Category 1 *(e)*
Single detached dwelling
Utilities *(e)*

1.2 **Discretionary Uses – MPC**

Cemetery and interment services
Community hall
Exhibition centre
Farmer's market
Home occupation 3
Kennel, breeding
Moved-in building
Parking areas and structures
Recreation facility
Religious assembly
Renewable energy, individual
Riding stable/arena
Rodeo grounds
Short-Term Rental 2
Sign, Category 2 and 3
Stripping and sale of topsoil

Discretionary Uses – DO

Dwelling unit, combined
Home occupation 2
Moved-in dwelling
Second dwelling unit
Secondary suite

(e) means "Exempt" and development will not require a development permit if it meets all the provisions of this Bylaw and is in accordance with any applicable requirements in Schedule 3.

SECTION 2 PARCEL AND LOT SIZE

2.1 A minimum lot size of 0.4 ha (1 acre) is recommended for any permitted or discretionary use. This may be varied by the Municipal Planning Commission to reasonably accommodate the proposed use. Parcels and lot sizes for all land uses shall be determined by the Municipal Planning Commission. The following parcel sizes apply to the uses listed below.

2.2 Extensive Agriculture

(a) existing parcels;

(b) 64.8 ha (160 acres) or an unsubdivided quarter section.

2.3 Farmsteads

(a) existing parcels;

(b) flexible maximum based on farmstead definition.

2.4 Vacant Country Residential

(a) existing parcels;

(b) minimum of 0.4 ha (1 acre);

(c) maximum of 1.2 ha (3 acres.

SECTION 3 DENSITY

3.1 The maximum number of parcels allowed on an unsubdivided quarter section of land shall be two, unless a redesignation process is undertaken and approved.

SECTION 4 DEVELOPMENT APPLICATION REFERRALS

4.1 Any application for a discretionary use within this land use district shall be forwarded to the appropriate urban municipality for comments, or as directed in an intermunicipal development plan, before a decision by the Development Authority is rendered.

SECTION 5 MINIMUM SETBACK FROM PROPERTY LINES

5.1 All structures and buildings shall be setback 7.6 m (25 ft) from all property lines not fronting on or adjacent to a municipal roadway.

SECTION 6 MINIMUM SETBACKS FROM ROADS

6.1 No part of a building or structure shall be located within 38.1 m (125 ft) of the centre line of any public roadway which is not designated as a provincial highway under the *Highways Development and Protection Regulation*.

6.2 Any road designated as a provincial highway under the *Highways Development and Protection Regulation* is subject to setbacks as required by Alberta Transportation and any applications for development adjacent to a highway should be referred to Alberta Transportation for a Roadside Development Permit.

6.3 No part of any dugout, regardless of size, shall be located within 76.2 m (250 ft) of the right-of-way of a highway or public road.

6.4 Dugouts may be allowed closer to the centre line of a highway or public road if a barricade is installed along 100 percent of the length of that part of the dugout fronting the highway or public road and 25 percent of the length of the sides of the dugout.

SECTION 7 MINIMUM SETBACKS FROM IRRIGATION INFRASTRUCTURE

7.1 No part of a building or structure shall be located:

(a) within 10.0 m (33 ft) of the centreline of a Bow River Irrigation District (BRID) irrigation pipeline or 3.0 m (10 ft) of a registered right-of-way or easement for any irrigation pipeline or irrigation canal, whichever is greater;

(b) within 60.1 m (200 ft) from any BRID or Alberta Environment water reservoir measured from the water's edge at full supply level (FSL) or 30.5 m (100 ft) from the registered reservoir right-of-way, whichever is greater.

SECTION 8 MINIMUM FLOOR AREA REQUIREMENT

8.1 The minimum floor area of the principal dwelling shall not be less than 74.3 m^2 (800 ft^2), not including multi-unit dwellings.

SECTION 9 ACCESS

9.1 The municipality may, at the time of subdivision or development, require the developer to enter into an agreement for the construction or upgrade of any approach(es) necessary to serve the development area in accordance with County Design Guidelines.

9.2 To ensure proper emergency access, all developments shall have direct legal and physical access to a public roadway in accordance with County Design Guidelines. If the development is within 300 m (984.3 ft.) of a provincial highway, direct legal and physical access to a public roadway shall be to the satisfaction of Alberta Transportation.

9.3 The requirement for a service road or subdivision street to provide access may be imposed as a condition of subdivision approval for any new development. Survey and construction costs shall be the responsibility of the applicant.

SECTION 10 ACCESSORY BUILDINGS

10.1 An accessory building shall not be used as a dwelling unit except where approval is granted for a Dwelling Unit, Combined.

10.2 An accessory building shall be setback a minimum 3.0 m (10 ft) from the principal dwelling and from all other structures on the same lot.

10.3 Where a structure is attached to the principal building on a site by a roof, an open or enclosed structure, a floor or foundation, it is to be considered a part of the principal building and is not an accessory building.

10.4 An accessory building shall only be constructed after the principal building has been constructed or the principal use established; except where the accessory building is used for agricultural purposes as outlined in Section 1.4(a) of Schedule 3.

SECTION 11 FENCES AND SHELTERBELTS

11.1 Agricultural fences constructed of rails, stakes, strung wire, or similar material with more than 85 percent of their surface area open for free passage of light and air may be located along the property boundaries of any agricultural parcel and are not subject to the 38.1 m (125 ft) setback from municipal roads or the required setbacks for the land use district.

11.2 Fences used as an enclosure, barrier, boundary, means of protection, privacy screening or confinement constructed of any allowable material (wood, stone/brick, metal, or plastic) with less than 85 percent of their surface area open for free passage of light must be located outside the required setbacks for the land use district and shall not exceed 2.4m (8 ft.) in height.

11.3 In rural areas along municipal roads, the construction or erection of a fence, hedge or shelterbelt shall comply with the following:

(a) no fence, hedge, tree or shelterbelt shall be erected which would unduly restrict the vision of approaching traffic; and

(b) no fence, hedge, tree or shelterbelt under Section 11.2 shall be erected closer than 7.6 m (25 ft) of the right-of-way of a municipal road. This provision shall not apply to existing yardsites developed before the passing of this Bylaw.

SECTION 12 SERVICING REQUIREMENTS

12.1 Every development shall be required to install a sewage disposal system and potable water system to the satisfaction of the Development Authority and in accordance with any applicable County Design Guidelines. The Development Authority may refuse a development if the parcel on which it is proposed is not large enough to support a sewage disposal system to the standard required.

SECTION 13 SUBDIVISION

General

13.1 The Municipal Planning Commission may only approve one subdivision on an unsubdivided quarter section within the Urban Fringe – UF district. The Municipal Planning Commission may consider a quarter section to be unsubdivided if previous subdivisions were for the purpose of:

(a) public or quasi-public use;

(b) the parcel meets the requirements of 12.4, Agricultural Uses;

(c) the parcel meets the requirements of 12.6, Cut-Off or Fragmented Agricultural Parcel; or

(d) the parcel meets the requirements of 12.9, Subdivision of Existing Small Titles.

Agricultural Uses

13.2 A subdivision for an intensive horticultural use may be treated as an agricultural use and may be permitted as one of the allowable subdivisions from a quarter section.

13.3 The Municipal Planning Commission shall not approve an application for subdivision of a parcel on which an existing or proposed confined feeding operation (CFO) is located.

13.4 The creation of large agricultural parcels will be considered on a case-by-case basis and may include the following:

(a) the creation of a 32.4 ha (80 acre) parcel provided there is a minimum residual parcel size of 28.3 ha (70 acres); or

(b) logical divisions based on topography or other conditions at the discretion of the Municipal Planning Commission.

13.5 A parcel created pursuant to the above policy or previous provincial policies may be eligible for the subdivision of an existing farmstead or vacant parcel provided that the proposal is consistent with the requirements established for single lot parcels in 12.10 and 12.11.

Existing Agricultural Parcels

13.6 The enlargement, reduction or realignment of an existing separate parcel may be approved provided that:

(a) the additional lands required are to accommodate existing or related improvements; or

(b) the proposal is to rectify or rationalize existing habitation, occupancy, cultivation or settlement patterns; and

(c) no additional parcels are created over and above those presently in existence;

(d) the proposed new lot and the proposed residual lot will continue to have direct legal and physical access to a public roadway, adequate development setbacks, and a suitable building site; and

(e) the size, location and configuration of the proposed lot will not significantly affect any irrigation or transportation system in the area nor the urban expansion strategies of neighbouring municipalities.

Cut-Off or Fragmented Agricultural Parcel

13.7 Subdivision of an undeveloped or developed cut-off parcel may be approved if:

(a) the proposed lot is separated from the residual by:

(i) a registered exception from the title,

(ii) a feature that creates a significant physical barrier to use of both sides as a unit;

(b) the proposed lot has legal access;

(c) neither the proposed lot or the residual parcel are occupied by a confined feeding operation.

13.8 A parcel created pursuant to the provisions of the above policy or previous provincial policies may be eligible for the subdivision of an existing farmstead or vacant parcel provided that the proposal is consistent with the requirements established for single lot parcels in 12.1 and 12.11 and the residual of the fragmented parcel must be at least 1.2 ha (3 acres) in size.

Subdivision of Existing Small Titles

13.9 An existing title of land that is 16.2 ha (40 acres) or less but greater than 2.4 ha (6 acres) may be divided into two parcels if:

(a) both parcels can accommodate joint access to a public road; and

(b) the subdivision does not propose to create more than four titles per quarter.

Single Lot Developed Farmstead

13.10 A subdivision that proposes to create a single parcel containing a developed residence or farmstead may be approved provided that:

(a) the proposed parcel is to be subdivided from a previously unsubdivided quarter section compliant with the farmstead definition with a flexible maximum parcel size based on the improvements; and

(b) **Farmstead** means a part of a parcel that:

(i) is presently or was formerly used as a single detached dwelling;

(ii) is further developed with agricultural buildings such as quonsets and grain bins, accessory buildings, structures such as corrals, storage compounds and/or storage or areas used for farm machinery, produce and fertilizer, dugout and/or water well or municipal rural water and septic system;

(iii) is of a compact size and physically defined by topography, shelterbelts or other physical characteristics;

(iv) does not include any cultivated farmland or lands suitable for agricultural production unless included within a shelter belt and/or physically defined area. Fencing alone shall not constitute a physically defined area if it encompasses agricultural land or hazard lands that are not necessary for the habitation of the proposed subdivision and that may be left with the larger agricultural parcel unless impractical to do so; limited pasture land used for grazing of animals may be included where the lands are part of a developed yard site; and

(c) the proposed lot on which the dwelling is located and the proposed residual parcel have direct legal and/or physical access to a public roadway; and

(d) the access is satisfactory to Alberta Transportation where the access is onto or in close proximity to a primary highway; and

(e) the size and location of the proposed lot will not significantly affect any irrigation system in the area;

(f) the dwelling unit located on the proposed parcel can meet or exceed the minimum distance separation (MDS) requirements from an existing confined feeding operation, as established in the *Agricultural Operation Practices Act, Standards and Administration Regulation*; and

(g) the residual parcel size after subdivision is to be flexible based on the proposal for subdivision.

Single Lot Vacant

13.11 A subdivision which proposes to create a single vacant parcel may be approved provided that:

(a) the proposed parcel to be created is a maximum of 1.2 ha (3.0 acres) in size;

(b) the proposed single residential lot contains, in the opinion of the Municipal Planning Commission, a buildable site;

(c) the proposed single residential lot can be serviced to the satisfaction of the Municipal Planning Commission;

(d) the development on the proposed single residential lot will not, in the opinion of the Municipal Planning Commission, inhibit public access to or otherwise have a detrimental effect on agriculture or the recreational use of a river valley, water body, environmentally sensitive area or special scenic location;

(e) the proposed lot and the residual parcel both have direct legal and physical access to a public roadway;

(f) the access is satisfactory to Alberta Transportation where the access is onto or in close proximity to a primary highway; and

(g) the size and location of the proposed lot will not significantly affect any irrigation system in the area.

Public and Institutional Uses

13.12 A subdivision application for public or institutional uses may be recommended for approval if:

(a) the Municipal Planning Commission is satisfied that suitable, existing alternative parcels are not reasonably available in another land use district;

(b) the legal and physical access, including access to the residual agricultural lot, satisfies Alberta Transportation, in the case of a provincial highway or the Municipal Planning Commission in the case of municipal roads; and

(c) the Municipal Planning Commission is satisfied that the use is primary, suitable, serviceable and will be developed as proposed; and

(d) where already functioning, the application encompasses the developed site only.

13.13 The conversion of small parcels established for public or institutional purposes to other uses should be limited to those developments which, in the opinion of the Municipal Planning Commission, are considered appropriate and compatible with surrounding uses.

SECTION 14 LAND SUITABILITY AND SERVICING REQUIREMENTS – See Schedule 4.

SECTION 15 STANDARDS OF DEVELOPMENT – See Schedule 5.

PUBLIC SERVICE – PS

PURPOSE: *To provide for publicly-owned services and facilities and to protect the operation of these facilities from encroachment by incompatible land uses. When located within or adjacent to other major land uses, the development of these uses must be sensitive to these neighbouring areas.*

SECTION 1 USES

1.1 **Permitted Uses**

Accessory building, structure or use
Additions to existing buildings
Parking areas and structures
Parks and playgrounds
Public building or use
Public day use area
Sign, Category 1 *(e)*
Sign, Category 2
Utilities *(e)*

1.2 **Discretionary Uses – MPC**

Airport
Airstrip
Dwelling Unit, Combined
Entertainment establishment
Hangar
Medical treatment services
Moved-in building
Recycling facility
Renewable energy, individual
School
Shipping container
Waste management site
Waste management transfer station
Wastewater treatment plan
Water treatment plant and reservoirs

Discretionary Uses – DO

Sign, Category 3

(e) means "Exempt" and development will not require a development permit if it meets all the provisions of this Bylaw and is in accordance with any applicable requirements in Schedule 3.

SECTION 2 MINIMUM LOT SIZE

2.1 Existing parcels or as required by the Municipal Planning Commission.

SECTION 3 MINIMUM SETBACK FROM PROPERTY LINES

3.1 All structures and buildings shall be setback 7.6 m (25 ft) from all property lines not fronting on or adjacent to a municipal roadway.

SECTION 4 MINIMUM SETBACKS FROM ROADS

4.1 No part of a building or structure shall be located within 38.1 m (125 ft) of the centre line of any public roadway which is not designated as a provincial highway under the *Highways Development and Protection Regulation*.

4.2 Any road designated as a provincial highway under the *Highways Development and Protection Regulation* is subject to setbacks as required by Alberta Transportation and any applications for development adjacent to a highway should be referred to Alberta Transportation for a Roadside Development Permit.

4.3 No part of any dugout, regardless of size, shall be located within 76.2 m (250 ft) of the right-of-way of a highway or public road.

4.4 Dugouts may be allowed closer to the centre line of a highway or public road if a barricade is installed along 100 percent of the length of that part of the dugout fronting the highway or public road and 25 percent of the length of the sides of the dugout.

SECTION 5 MINIMUM SETBACKS FROM IRRIGATION INFRASTRUCTURE

5.1 No part of a building or structure shall be located:

(a) within 10.0 m (33 ft) of the centreline of a Bow River Irrigation District (BRID) irrigation pipeline or 3.0 m (10 ft) of a registered right-of-way or easement for any irrigation pipeline or irrigation canal, whichever is greater;

(b) within 60.1 m (200 ft) from any BRID or Alberta Environment water reservoir measured from the water's edge at full supply level (FSL) or 30.5 m (100 ft) from the registered reservoir right-of-way, whichever is greater.

SECTION 6 ACCESSORY BUILDINGS

6.1 An accessory building shall not be used as a dwelling unit.

6.2 An accessory building shall be setback a minimum 3.0 m (10 ft) from the principal dwelling and from all other structures on the same lot.

6.3 Where a structure is attached to the principal building on a site by a roof, an open or enclosed structure, a floor or foundation, it is to be considered a part of the principal building and is not an accessory building.

6.4 An accessory building shall only be constructed after the principal building has been constructed or the principal use established; except where the accessory building is used for agricultural purposes as outlined in Section 1.4(a) of Schedule 3.

SECTION 7 ACCESS

7.1 The municipality may, at the time of subdivision or development, require the developer to enter into an agreement for the construction or upgrade of any approach(s) necessary to serve the development area in accordance with County Design Guidelines.

7.2 To ensure proper emergency access, all developments shall have direct legal and physical access to a public roadway in accordance with County Design Guidelines. If the development is within 300 m (984.3 ft.) of a provincial highway, direct legal and physical access to a public roadway shall be to the satisfaction of Alberta Transportation.

7.3 The requirement for a service road or subdivision street to provide access may be imposed as a condition of subdivision approval for any new development. Survey and construction costs shall be the responsibility of the applicant.

SECTION 8 LAND SUITABILITY AND SERVICING REQUIREMENTS – See Schedule 4.

SECTION 9 STANDARDS OF DEVELOPMENT – See Schedule 5

DIRECT CONTROL – DC

PURPOSE: *To give Council the flexibility and discretion to approve a use or development, provided it would not unduly interfere with the amenities of the neighbourhood or materially interfere with or affect the use, enjoyment or value of neighbouring properties and has legal and physical access to a developed municipal roadway.*

SECTION 1 PERMITTED AND DISCRETIONARY USES

1.1 Any use Council considers appropriate.

SECTION 2 MINIMUM LOT SIZE

2.1 At the discretion of Council.

SECTION 3 MINIMUM SETBACK REQUIREMENTS

3.1 At the discretion of Council.

SECTION 4 STANDARDS OF DEVELOPMENT

4.1 A detailed conceptual scheme shall be submitted with the application to the satisfaction of Council.

SECTION 5 OTHER STANDARDS

5.1 As required by Council.

SECTION 6 APPROVAL PROCEDURE

6.1 Before Council considers an application for a use or development in the Direct Control district, it shall:

(a) cause a notice to be issued by the Development Officer in accordance with Administration Sections 43 and 44 of this Bylaw;

(b) hear any persons that claim to be affected by the decision on the application.

6.2 Council may then approve the application with or without conditions or refuse the application.

6.3 When applicable, Council should seek comments from other agencies such as the planning advisor, regional health authority or any applicable provincial government department.

SECTION 7 APPEAL PROCEDURE

7.1 Pursuant to section 641(4)(a) of the *MGA*, if a decision with respect to a development permit application is made by Council, there is no appeal to the Subdivision and Development Appeal Board.

USE DEFINITIONS

USE DEFINITIONS

The following definitions shall apply to the entire Bylaw.

NOTE TO READER: *These definitions are for the purposes of classifying and regulating specific land uses. Some land use definitions are general, and are defined for reference to support more specific land uses listed within the land use districts. The classification of a land use is at the discretion of the Development Authority.*

A

ABATTOIR means the use of land or building in which animals are slaughtered and may include the packing, treating, storing and sale of the product.

ACCESSORY BUILDING means any structure:

(a) that is physically separate from the principal building on the lot on which both are located and which is subordinate and incidental to that of the principal building; a typical accessory building is a private garage or shed;

(b) the use of which is subordinate and incidental to that of the principal use of the site on which it is located.

No accessory building shall be used for human habitation.

ACCESSORY STRUCTURE means a structure that is detached from the principal building. It is ancillary, incidental, and subordinate to the principal building or use. Typical accessory structures include flagpoles, dugouts, swimming pools, and storage tanks. When a structure is attached to the principal building by a roof, a floor, a wall, or a foundation, either above or below grade, it is considered part of the principal building. No accessory structure shall be used for human habitation.

ACCESSORY USE means a use of a structure or parcel which is ancillary, subordinate, and incidental to the principal use of the building or site.

ADDITIONS TO EXISTING BUILDINGS means construction that increases the footprint of an existing building or structure on the parcel of land, providing for an expansion of the approved use of the property. Typically, there will be a common connection from the existing building to the addition that includes a foundation of some type beneath the addition.

ADULT ESTABLISHMENT means commercial establishments in which a significant portion of the business is to:

(a) display, sell, have in their possession for sale, offer for view, publish, disseminate, give, lease, or otherwise deal in any written or printed matter, pictures, films, sound recordings, machines, mechanical devices, models, facsimiles, or other material and paraphernalia depicting sexual conduct or nudity and which exclude minors by reason of age; and/or

(b) which display for viewing any film or pictures depicting sexual conduct or nudity and which exclude minors by reason of age; and/or

(c) in which any person appears or performs in a manner depicting sexual conduct or involving nudity and from which minors are excluded by reason of age.

AGRICULTURAL BUILDING means a building or structure associated with and generally essential to an agricultural operation that:

(a) does not contain a residential occupancy;

(b) directly supports a farm operation;

(c) has a low occupant load; and

(d) is not used or occupied by, or expected to be used or occupied by, the public or persons, other than the farmer or farmers that own the building, their immediate family, and/or their employees, that may be in the building from time to time;

and the building is used for

(e) housing livestock;

(f) storing, sorting, grading or bulk packaging primary agricultural products; or

(g) housing, storing or maintaining machinery associated with the operation of farm on which it is located.

Such structures or facilities may include, but are not limited to the following: machine sheds, storage sheds, granaries, grain bins, silos, animal housing and/or feeding facilities, repair shops, corrals, pens, and other ancillary farm structures.

AGRICULTURAL OPERATION means an agricultural activity conducted on agricultural land for gain or reward or in the hope or expectation of gain or reward (AOPA, Section 1), and includes

(a) the cultivation of land,

(b) the raising of livestock, including domestic cervids (ie. elk, moose and deer) within the meaning of the *Livestock Industry Diversification Act* and poultry,

(c) the raising of fur-bearing animals, pheasants or fish,

(d) the production of agricultural field crops,

(e) the production of fruit, vegetables, sod, trees, shrubs and other specialty horticultural crops,

(f) the production of eggs and milk,

(g) the production of honey,

(h) the operation of agricultural machinery and equipment, including irrigation pumps,

(i) the application of fertilizers, insecticides, pesticides, fungicides and herbicides, including application by ground and aerial spraying, for agricultural purposes,

(j) the collection, transportation, storage, application, use, transfer and disposal of manure, composting materials and compost, and

(k) the abandonment and reclamation of confined feeding operations and manure storage facilities.

AGRICULTURAL PROCESSING means the use of land or a building for the upgrading of a product, for distribution or for sale that was originally produced in an agricultural operation.

AGRICULTURAL REPAIR SHOP means an operation or facility for the service and/or repair of agricultural implements and equipment. The facility may also include an outside storage area.

AGRICULTURE, EXTENSIVE means methods used to gain a livelihood on parcels of land containing 28.3 ha (70 acres) more or less, or all of the land in a parcel as recorded on the certificate of title, by the raising of crops or the rearing of livestock either separately or in a mixed farm operation.

AIRPORT means any area designed, prepared, equipped or set aside for the arrival, departure, movement or servicing of commercial or private aircraft; and includes any associated buildings, installations, open space, runways and equipment for landing/takeoff and flight control. Such an operation will include all the facilities required for the housing, administration, management and maintenance of aircraft.

AIRSTRIP means land used as an airstrip or aerodrome (whether licensed or unlicensed) as determined by the appropriate federal department.

ANHYDROUS AMMONIA STORAGE/FACILITY means a tank, structure or facility used for the storage and distribution of anhydrous ammonia used for fertilizer for agricultural crops and includes any development that meets the criteria described in the *"Guidelines for the Location of Stationary Bulk Ammonia Facilities"* prepared by Alberta Environment and Sustainable Resource Development.

ANIMAL CARE SERVICE, LARGE means development used for the care, treatment, boarding, grooming or training of animals and livestock within or outside buildings and includes the supplementary sale of associated products. This use includes veterinary offices or hospitals, animal shelters, facilities for impounding and quarantining animals and related research facilities but does not include a kennel (for breeding purposes).

ANIMAL CARE SERVICE, SMALL means development for the on-site treatment, boarding, grooming or training of small animals such as household pets, where on-site accommodation may be normally provided and where all care and confinement facilities are enclosed within a building that may include outdoor access areas. This use includes off-site treatment of animals or livestock and the supplementary sale of associated products but does not include a kennel (for breeding purposes). Examples include pet grooming salons, pet clinics and veterinary offices.

AUCTION MARKET means the use of land or buildings for the auctioning or sale and related temporary storage of primarily livestock, but may also include household effects, personal goods and equipment, and vehicles. This use includes livestock sales yards but does not include on-site slaughtering such as an abattoir or one-time on-site estate auction sales.

AUTO RECYCLING AND SALVAGE YARD means a facility or operation specifically intended for the dismantling of automotive vehicles and the sale of those parts to the general public. Such a facility may include an administrative office, work areas, and outdoor storage.

AUTO REPAIR AND PAINT SHOP means a building where motor vehicles are repaired and also where motor vehicle bodies and parts, and other metal machines, components, or objects may be painted. Painting of this type shall not be done outdoors, but must be set up in a properly ventilated building. This use may also include an outdoor storage area and an office component.

AUTO SALES AND SERVICE means a building or facility where motor vehicles and/or parts are displayed for sale. The business may include new and/or used automobile sales, and may also include auto repairs, but not body work and painting. Outdoor storage and display areas may also be included, as well as an office component.

B

BAR/LOUNGE means a development where the primary purpose of the facility is the sale of alcoholic beverages to the public, for consumption within the premises and typically includes neighbourhood pubs, bars, beverage rooms, and cocktail lounges. This use typically has a limited menu and minors are prohibited from patronizing the establishment during at least some portion of the hours of operation.

BATTERY ENERGY STORAGE SYSTEMS (BESS) means an energy storage system that can store and deploy generated energy; typically a group of batteries that charge (i.e. collect energy) and store electrical energy from a generation facility then discharge that energy at a later time to provide electricity for the distribution system.

BED AND BREAKFAST means an owner-occupied dwelling offering short-term lodging, generally not exceeding one week, to registered guests and providing only a breakfast meal. The facility may include one or more supplementary buildings for accommodation.

BOAT LAUNCH means a ramp, typically constructed of wood, metal, or earth/gravel, that extends from a shoreline into a water body, specifically for the purpose of launching or removing watercraft from the water.

BULK FERTILIZER STORAGE AND SALES means a facility used to store bulk fertilizer for sale and distribution. Such a facility may include an administrative office, outdoor work area(s) and storage area(s).

BULK FUEL STORAGE AND SALES means a facility used to store bulk fuel for sale and distribution. Such a facility may include an administrative office, outdoor work area(s) and storage area(s).

BUSINESS SUPPORT SERVICE means an establishment primarily engaged in providing services for other business establishments such as advertising, building maintenance, clerical, printing, bookkeeping, financial services, employment services, professional advice, security and other similar services.

C

CAMPGROUND means a development designed with distinct sites for short-term camping purposes by two or more camping units. The use of the land is intended for seasonal occupancy by camping-related equipment. The campground may also include supplementary facilities such as an administrative office, washrooms, cooking and eating shelters, convenience retail operations, laundry facilities and a living area for the owner/operator. Also see **RECREATIONAL VEHICLE PARK.**

CAMPING UNIT means a temporary structure facilitating overnight occupancy by one or more persons, typically for recreational purposes within a campground, and includes tents, recreational vehicles and other similar, non-permanent facilities.

CANNABIS means cannabis plant, fresh cannabis, dried cannabis, cannabis oil and cannabis plant seeds and any other substance defined as cannabis in the *Cannabis Act* (Canada) and its regulations, as amended from time to time and includes edible products that contain cannabis.

CANNABIS ACCESSORY means cannabis accessory as defined in the *Cannabis Act* (Canada) and its regulations, as amended from time to time.

CANNABIS PRODUCTION FACILITY means the use of building or land where federally approved medical or non-medical (recreational) cannabis plants are grown, processed, packaged, tested, destroyed, stored or loaded for shipping, and that meets all federal or provincial requirements and that meets all requirements of this Bylaw.

CANNABIS RETAIL STORE means the use of a store, premises or a building for a commercial retail cannabis business, licensed by the Province of Alberta, where legal non-medical cannabis and cannabis accessories are sold to individuals who attend at the premises and the product sales or associated sales are expressly authorized by the Alberta Gaming and Liquor Commission (AGLC).

CAR WASH means a user pay facility, whether automated or manual, used to clean the exterior and/or interior of personal motor vehicles. This type of facility is not intended for commercial vehicles, oilfield vehicles, cattle liners, farm equipment, or other similar vehicles.

CARDLOCK FUEL DISPENSING FACILITY means a building, structure or part thereof, where fuel, oil and other similar products used in the operation of truck engines are sold to account customers only via cardlock controllers.

CEMETERY AND INTERMENT SERVICES means a development for the entombment of the deceased and may include such facilities as crematories, cinerarium, columbarium, mausoleums, memorial parks, burial grounds, cemeteries and gardens of remembrance.

CHILD CARE FACILITY means the use of a building or facility (or part) for the care and supervision of children during the day by person(s) typically unrelated to the children. Examples of such a facility include day-care centres, nurseries, day homes, and after-school or baby-sitting programs.

COMMERCIAL TRUCK WASH means a commercial facility for cleaning the interior and exterior of commercial trucks. In the case of oilfield tanker trucks, washing the interior of the tank requires adherence to the Code of Practice for Tanker Truck Washing Facilities (EPEA). In the case of cattle transport trucks, washing facilities that deal with manure are regulated by the NRCB.

COMMERCIAL VEHICLE means a motor vehicle used in the operation of a commercial business or home occupation operation for the transport of goods and/or equipment incidental to the operation of the business. Typically, the vehicle will have a commercial license plate and an identifiable logo design on it.

COMMUNITY HALL means a facility or building which is owned or leased by a community association or group, non-profit organization, or corporate entity for the purposes of public service, use or recreation.

COMPOST FACILITY, TYPE 1 means a waste management facility where waste in the form of vegetative matter, not including hazardous waste or manure, is collected and decomposed, but does not include a manure storage facility as defined in the *Agricultural Operation Practices Act (AOPA*).

COMPOST FACILITY, TYPE 2 means a waste management facility where only vegetative matter and/or manure, is collected and decomposed, but does not include a manure storage facility as defined in the *Agricultural Operation Practices Act (AOPA*).

CONFINED FEEDING OPERATION means a commercial agricultural operation where livestock, of a number exceeding the threshold established in Schedule 2 of the *Agricultural Operations, Part 2 Matters Regulation* (see Appendix F) is confined within a facility for the purpose of sustaining, finishing or breeding. Such an operation requires a registration or approval under the *Agricultural Operation Practices Act (AOPA*). This definition does not include seasonal feeding and bedding sites of a typical livestock operation.

CONTRACTOR, GENERAL means development used for industrial service support and construction. Typical uses include cleaning and maintenance contractors, building construction, landscaping, concrete, electrical, excavation, drilling heating, plumbing, paving, road construction, sewer or similar services of a construction nature which require on-site storage space for materials, construction equipment or vehicles normally associated with the contractor service. Any sales, display, office or technical support service areas shall be accessory to the principal general contractor use.

CONTRACTOR, LIMITED means a development used for the provision of electrical, plumbing, heating, painting, catering and similar contractor services primarily to individual household and the accessory sales of goods normally associated with the contractor services where all material are kept within an enclosed building, and there are no accessory manufacture activities or fleet storage of more than five vehicles.

CROP SPRAYING OPERATION AND FACILITY means a business involved in the application of chemicals for crop maintenance (i.e. herbicides). Such an operation may include an administrative office, ancillary structures, an outside storage area, work areas, parking, and other components deemed necessary for the general operation of the business.

D

DRIVE-IN RESTAURANT means an establishment where food is prepared and served on the premises for sale to the public and includes car attendant and/or drive-through, pick-up service.

DRIVING RANGE means an area equipped with distance markers, clubs, balls, and tees for practicing golf drives and putting, and which may include a snack-bar and pro shop and other incidental activities pertaining to this activity.

DUGOUT means an excavation specifically sited and constructed for the purpose of catching and storing water. Depending on the circumstances, the dugout may be intended for either seasonal use or permanent use. For use purposes these may be considered as an **ACCESSORY STRUCTURE**.

DUPLEX means a residential structure that contains two separately owned dwelling units on one parcel of land. Typically the duplex will have separate entrances for each owner but the two units will be connected either by a common floor/ceiling, or by a common wall (party wall) between units.

DWELLING UNIT means a structure built for the purpose of being a self-contained living premises, designed to be occupied by an individual or family or other household group, in which facilities are included for cooking, sanitation, and sleeping. Such units include, but are not limited to, single-unit dwellings, modular dwellings, duplexes, apartments, manufactured dwellings and moved-in buildings for residential use. For the purpose of this Bylaw, a Camping Unit is not a Dwelling Unit.

DWELLING UNIT, COMBINED means a dwelling unit that is contained, wholly or partly, within an accessory building that appears, predominantly, as an accessory building.

DWELLING, MANUFACTURED 1 means a completely self-contained dwelling unit, designed and constructed entirely within a factory setting. A manufactured dwelling 1 refers to a new structure, and one that has not been previously occupied or used as a show home. Typically, it is transported to a site in not more than one piece on its own chassis and wheel system or on a flatbed truck. For the purposes of this Bylaw, a manufactured dwelling does not include a “modular dwelling” or “ready-to-move dwelling”.

DWELLING, MANUFACTURED 2 has the same meaning as manufactured dwelling 1, except that it has been occupied previously as a dwelling and must be constructed no earlier than 1985.

DWELLING, MODULAR 1 means a dwelling unit built at an off-site manufacturing facility in conformance with CSA standards designed in two or more modules or sections. The dwelling is transported by transport trailer in sections and delivered to the site where it is assembled and placed on a contiguous concrete basement.

DWELLING, MODULAR 2 means a dwelling unit built at an off-site manufacturing facility in conformance with CSA standards designed in two or more modules or sections. The dwelling is transported by transport trailer in sections and delivered to the site where it is assembled and placed on approved foundation other than a contiguous concrete basement.

DWELLING, **MOVED-IN** means a previously existing, established and occupied dwelling, which is removed from one site and then transported and re-established on another site. For the purposes of this Bylaw, a moved-in building does not include a “manufactured dwelling”, “modular dwelling”, “ready-to-move dwelling”, motor home, travel trailer, recreation vehicle and any similar vehicles that are neither intended for permanent residential habitation nor subject to the current provincial building requirements.

DWELLING, MULTI-UNIT means a residential building that contains three or more dwelling units where each unit is provided with its own separate primary access to the outside.

DWELLING, READY-TO-MOVE means a previously unoccupied dwelling constructed at a place other than its permanent location (off-site) which is built to current Alberta Safety Codes Standards and is transported in whole or in parts, complete with paint, cabinets, floor covering, lighting and plumbing fixtures, to a site and placed on a permanent wood or concrete basement foundation. For purposes of this Bylaw, a ready-to-move dwelling does not include a manufactured dwelling, modular dwelling or moved-in building.

DWELLING, SECOND means a standalone additional dwelling unit on a lot which is not contained within the principal residence. A secondary dwelling unit may be a manufactured dwelling, ready-to-move dwelling, modular, moved-in dwelling or a site-built dwelling/accessory building in accordance with the land use district it is proposed to be located within.

DWELLING, SINGLE DETACHED means a freestanding residential dwelling containing one dwelling unit stick built on site, not forming part of and not physically attached to any other dwelling or structure.

E

ENTERTAINMENT ESTABLISHMENT means a use that provides dramatic, musical, dancing or cabaret entertainment and includes supplementary food service and/or facilities for alcoholic beverage consumption.

EQUIPMENT SALES, RENTAL AND SERVICE means development for the retail sale, wholesale distribution, rental and/or service of hand tools, small construction, farming, gardening and automotive equipment, small machinery parts and office machinery and equipment.

EXHIBITION CENTRE means the use of land or building, public or private, for temporary events including seasonal shows, conventions, conferences, seminars, product displays or sale of goods, recreation activities, and entertainment functions. This use may include accessory functions including food and beverage preparation and service for on-premise consumption.

F

FARM/INDUSTRIAL MACHINERY SALES, RENTAL AND SERVICE means the use of land or buildings for the sale, service and/or rental of agricultural implements and heavy machinery used in the operation, construction or maintenance of buildings, roadways, pipelines, oil fields, mining, or forestry operations, and in freight hauling operations. Cleaning, repairing and sale of parts and accessories may be allowed as part of the principal use.

FARM SUPPLY AND SERVICE means a commercial operation established for the sale, storage and distribution of agricultural products, including grain and other crop products (including elevators), livestock feed and supplements, fertilizers and chemicals. Such a facility may include an administrative office, ancillary structures, outdoor work areas, parking, and outdoor storage areas.

FARMER'S MARKET means the use of land or buildings where fresh farm or garden produce is sold in retail or wholesale setting and where goods are typically displayed in bulk bins or stalls for customer selection. This use includes vendors of fruit, vegetables, meat products, baked goods, dry goods, spices and non-food products such as handicrafts, provided that the sale of fresh food products remains the primary function.

FARMING means the use of a parcel of land and/or buildings for the raising of livestock or the production of crops. This type of use does not include a confined feeding operation for which registration and approval is required from the Natural Resources Conservation Board.

FEED MILLS/GRAIN TERMINALS means a facility for the collection, grading, processing, storage, and shipping and receiving of grain crops.

FLEET AND TRANSPORTATION SERVICES 1 means development involving a fleet of vehicles for:

(a) the delivery of food by mobile catering service; or

(b) the transportation of people, mail, negotiable currency and documents; or

(c) the delivery of packages and small articles by courier service.

This use includes the rental and lease of vans and trucks to the public and other businesses, facilities for the routine storage and servicing of vehicles owned and operated by the fleet service business as well as the incidental sale of vehicles as an accessory use. Examples include bus and coach line transport services, taxicab or limousine stations and dispatching offices, messenger and courier services, and truck and van rental offices.

FLEET AND TRANSPORTATION SERVICES 2 means development involving a fleet of vehicles for:

(a) the transportation of freight; or

(b) the transportation of livestock; or

(c) the transportation of vehicles, machinery and equipment.

This use includes facilities for the routine storage and servicing of vehicles owned and operated by the business as well as an administrative office, outdoor work area, outdoor and indoor storage areas and parking and loading areas.

FREIGHT TERMINAL means a commercial facility used for the storage and distribution of freight or cargo that is intended to be shipped by air, rail or highway transportation. Such a facility may include an administrative office, outdoor work area, outdoor and indoor storage areas and parking.

FUNERAL HOME means a commercial operation used for the arrangement of funerals, the preparation of the deceased for burial or cremation, and the holding of funeral services.

G

GARAGE means an accessory building or part of the principal building, designed and used primarily for the storage of motor vehicles. For use purposes these may be considered as an **ACCESSORY BUILDING**.

GARDEN SUITE/GRANNY SUITE/GARAGE SUITE – see **SECOND DWELLING**

GAS STATION means a commercial operation established to provide fuel and oil products for sale to the general public. Such an operation will have no provision to accommodate vehicle repairs or maintenance. The operation may include a building to accept payment for purchases and may also include limited retail sale of food products.

GOLF COURSE means an outdoor commercial recreational facility where the land is developed to accommodate the game of golf. Such a facility will typically include a club house, pro shop, driving range, parking, food service or restaurant, and ancillary structures associated with a golf course. The facility may be privately owned (requiring club membership) or publicly owned and available by paying a fee.

GOVERNMENT SERVICES means development providing municipal, provincial, or federal government services directly to the public or the community at large, and includes development required for the public protection or persons or property.

GRAVEL AND SAND PITS – See **NATURAL RESOURCE EXTRACTION AND PROCESSING**

GREENHOUSE means an indoor commercial horticultural operation used in the year-round cultivation of plants and may also include retail sales from the greenhouse site. **CANNABIS PRODUCTION FACILITY** is a separate use. For use purposes these may be considered as an **INTENSIVE HORTICULTURAL OPERATION**.

GROUP HOME, LIMITED means development consisting of the use of a building as a facility which is recognized, authorized, licensed or certified by a public authority as a social care facility intended to provide room and board for six residents or less, excluding staff, for foster children or disabled persons. The use class does not include treatment facilities such as detoxification centres.

GROUP HOME, MAJOR means development consisting of the use of a building as a facility which is recognized, authorized, licensed or certified by a public authority as a social care facility intended to provide room and board for seven residents or more, excluding staff, for foster children or disabled persons. The residential character of the development shall be primary with the occupants living together as a single housekeeping group.

H

HANGAR means a building or structure designed and used for the shelter of an aircraft.

HOME OCCUPATION means the use of a dwelling and/or its accessory buildings or lands by the occupant for the purpose of setting up a business, trade, or craft to provide goods or services to the general public. The home occupation use must be secondary to the residential use of the parcel and the applicant must be a permanent resident of the dwelling.

HOTEL means a development that primarily provides temporary sleeping accommodation for the transient public in rooms or suites. Typically, this use contains an office with a public register and has one or more attendants on duty at all times. Eating and drinking facilities shall be considered part of a hotel operation, but entertainment, convention, sports, recreation, personal service, office and retail facilities associated with this use shall be considered accessory uses. This use does not include a **BED AND BREAKFAST.**

I

INDUSTRIAL, HEAVY means a large-scale industrial manufacturing or processing activity. Without restricting the generality of the foregoing, heavy industry would include plants for the manufacturing of petroleum products, pulp and paper products, stone, clay and glass products, cement and lime products, fertilizers, animal by-products; plants engaged in the primary metal industry, including metal processing; the processing of natural gas or its derivatives; and incinerators, including those for municipal and industrial use. Heavy industrial uses may have some negative effect on the safety, use, amenity and enjoyment of adjacent or nearby sites due to the appearance, noise, odour, emission of contaminants, fire or explosive hazards, or dangerous goods.

INDUSTRIAL, ISOLATED means industrial or light industrial uses located on parcels of land not adjacent to other existing industrial uses and that would not substantially change the agricultural characteristics of an area.

INDUSTRIAL, LIGHT means development for the purpose of manufacturing, fabricating, processing, assembly, production or packaging of goods or products. Such a development may also include accessory uses in the form of administrative offices, warehousing, outdoor storage and wholesale distribution buildings. It is imperative that this use does not generate any detrimental impact, potential health or safety hazard, or any other factors which are regarded as nuisances and which could cause adverse effects on adjacent lands.

INTENSIVE HORTICULTURAL OPERATION means any relatively small parcel of land where land and/or buildings are used for the commercial production and sale of specialty crops grown by high yield and high-density techniques. Examples include but are not limited to the following types of development: greenhouses, nurseries, hydroponic or market gardens, mushroom or tree farms. **CANNABIS PRODUCTION FACILITY** is a separate use.

K

KENNEL, BREEDING means an establishment in which dogs (being dogs more than 8 months old), exceeding 4 but not exceeding 12, are housed for the primary purpose of breeding after which puppies are sold. This use may also include facilities for the care, grooming and boarding of dogs.

KENNEL, BREEDING (EXISTING) means an establishment in which dogs (being dogs more than 8 months old), exceeding 4 but not exceeding the number of dogs originally approved in a historically issued development permit (prior to October 4, 2017), are housed for the primary purpose of breeding after which puppies are sold. This use may also include facilities for the care, grooming and boarding of dogs.

L

LANDFILL – see **WASTE MANAGEMENT SITE**

LIQUOR STORE means a retail establishment licensed and regulated under provincial authority for the sale of any or all of beer, wine or spirits for consumption off-premises.

LIVESTOCK means cattle, swine, poultry, sheep, goats, horses, game and similar animals as defined in the *Agricultural Operations and Practices Act*.

LIVESTOCK TRUCK AND TRAILER WASH FACILITY means a commercial facility whose purpose is to allow cleaning of the interior and exterior of livestock transportation trucks. All washing facilities that deal with manure are regulated by the NRCB.

LUMBER YARD/BUILDING SUPPLY STORE means a commercial retail store where lumber, building materials, hardware and household accessories and other related goods are stored, offered or kept for sale and may include outdoor storage but does not include the manufacturing or fabrication of lumber or similar products.

M

MANUFACTURED DWELLING PARK/COMMUNITY means a comprehensively planned development for the placement and occupancy of new or previously occupied manufactured dwellings as residences which is managed by an operator and may include amenity areas and accessory facilities for the use and maintenance of the residents. Manufactured dwelling park does not include transient uses such as campgrounds.

MANUFACTURED DWELLING SALES AND SERVICE means a commercial operation where the land and buildings are used in the sale, rental and storage of new and used manufactured dwellings. Such an operation may include an administrative office, outdoor work and storage areas, parking, supplementary maintenance services and the sale of parts and accessories.

MANUFACTURING AND FABRICATION OPERATION means development used for manufacturing, fabricating, processing, assembly, production or packaging of goods or products, as well as administrative offices, warehousing and wholesale distribution uses which are accessory to the above provided that the use does not generate any detrimental impact, potential health or safety hazard or any nuisance beyond the boundaries of the site upon which it is situated. Such a facility may include an administrative office, ancillary structures, outdoor work areas, parking, and outdoor storage areas.

MARINA means any facility for the mooring, berthing, storing, docking or securing of watercraft, but not including community piers and other non-commercial boat docking and storage facilities. A marina may include boat sales, boat fuel sales, boat construction, boat repair, marine equipment sales, or promotional events, boat and jet ski rental, and other uses clearly incidental to watercraft activities.

MEDICAL TREATMENT SERVICES means development providing room, board and surgical or other medical treatment for the sick, injured or infirm including out-patient services and accessory staff residences. Typical facilities would include hospitals, sanitariums, nursing homes, convalescent homes, psychiatric hospitals, auxiliary hospitals and detoxification centres.

METEOROLOGICAL TOWER means a structure used to facilitate the collection and analysis of wind, temperature, precipitation, air pressure or other atmospheric data and may include an anemometer, wind direction vane, temperature and pressure sensors and other measurement devices attached to it at various levels above the ground.

MINI-STORAGE FACILITY means the use of land with compartmentalized buildings or designated sites set up for the storage of equipment, household or business materials, or vehicles, but excludes storage of hazardous goods or materials. Accessory to this use is the exterior screened storage of recreational vehicles, boats, trailers and similar items.

MIXED USE DEVELOPMENT means a tract of land or buildings with more than one type of use (such as a mix of office, retail, residential, entertainment, cultural, recreation, etc.), all of which are physically and functionally integrated and are mutually supporting and developed in a compact urban form.

MOTEL means a building or group of buildings on a site designed and operated to provide temporary accommodation for transient motorists and contains separate sleeping units, each of which is provided with an adjoining conveniently located parking stall. The building may also include accessory eating and drinking establishments and personal service shops.

MOTOR SPORTS PARK means a development or facility to allow a form of motorized racing held on enclosed off-road circuits or open courses consisting of trails, lanes, or racetracks, and also may consist of artificially made dirt tracks consisting of steep jumps and obstacles. Accessory uses to a motocross/motor sports park may include a pit/paddock, test track, mechanics area, concession or food sales, bleachers/viewing areas and public washroom facilities.

MOVED-IN BUILDING means a previously used or existing, established and working building, which is removed from a site, and then transported and re-established on another site. For the purposes of this Bylaw, a moved-in building does not include a “manufactured dwelling”, “modular dwelling’ or “ready-to-move dwelling”.

MUSEUM means a building or site used for the preservation, collection, display and /or demonstration of articles of historical significance and may include archival record.

MUSHROOM FARM means the commercial growing of mushrooms or other fungi for the purpose of selling the final product or any by-product thereof.

N

NATURAL RESOURCE EXTRACTION AND PROCESSING means the development of on-site removal, extraction and primary procession of raw materials, found on or under the site or accessible from the site, for sale or transfer off the site. Typical resources and raw materials would include peat, sand, silt and gravel, shale, clay, marl, limestone, gypsum, other minerals precious or semi-precious, timber and coal. Typical facilities or uses would include gravel pits (and associated crushing operations), asphaltic processing, sand pits, clay or marl pits, peat extraction, stripping of topsoil, timber removal, sawmills and related timber/wood processing.

O

OFFICE means an enclosed building or set of buildings to house the administrative activities of an operation. This does not generally include manufacturing or sales aspects of the operation however, an office may also include the professional facilities service entities where the sale of services occurs.

OILFIELD CONTRACTOR SERVICES means a use of land or buildings for the service of equipment, parts, and supplies used in the operation, construction or maintenance of oilfield businesses and operations. Associated activities may include cleaning, repairing and sale of parts and accessories. Such a facility may include an administrative office, ancillary structures, outdoor work areas, parking, and outdoor storage areas.

OILFIELD/PIPE EQUIPMENT AND STORAGE means a use of land or buildings for the use, storage, sale and rental of equipment, parts, pipes and supplies used in the operation, construction or maintenance of oilfield businesses and operations. Such a facility may include an administrative office, ancillary structures, outdoor work areas, parking, and outdoor storage areas.

OUTDOOR STORAGE means the use of land with or without attendant buildings for the open, outdoor storage of equipment, materials or vehicles, or processed or unprocessed resources or materials. For the purposes of this Bylaw, this definition is limited to those uses that require minimal on-site improvements, service and public amenities or facilities and does not include those goods or materials which are hazardous.

P

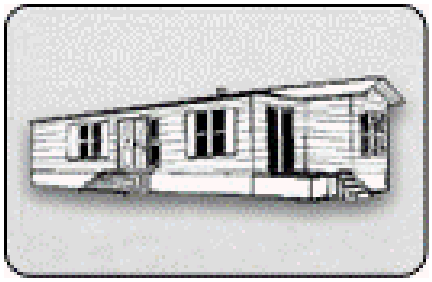

PARK MODEL RECREATIONAL UNIT means a unit built on a single chassis mounted on wheels which may be removed periodically. The unit is designed to facilitate occasional relocation with living quarters for a temporary residence or seasonal use, and must be connected to those utilities necessary for the operation of installed fixtures and appliances. It has a gross floor area, including lofts, not exceeding 50 m^2 (approx. 540 ft^2) in the set-up mode and has a width greater than 2.6 meters (8 ft. 6 in.) in the transit mode. Park Model Recreational Units always require a special tow vehicle and a special permit to move on the road as the width of the unit is greater than 2.6 meters. It conforms to the CSA Z-241 Series (park models) standard. For the purposes of this Bylaw, a park model recreational unit does not include a recreational vehicle or a manufactured dwelling.

PARK MODEL TRAILER means a unit designed to be towed by a vehicle, built on a single chassis mounted on wheels, usually containing one or more slide-outs, when in set-up mode the trailer does not exceed a maximum width of 2.6 m (102 inches) and 37.2 m^2 (400 ft^2) in gross trailer area, conforms to the CSA Z-240 RV Series standard and once on site is typically connected to local utilities. For the purposes of this Bylaw, a park model trailer does not include a recreational vehicle or a manufactured dwelling.

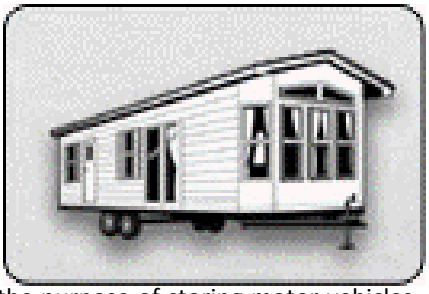

PARKING AREAS AND STRUCTURES means an area of land or building which is provided and maintained on the same lot as the principal use for the purpose of storing motor vehicles. This use does not include campgrounds or RV parks.

PARKS AND PLAYGROUNDS means land developed for public recreational activities that does not require major buildings or facilities, and may include open grassed areas, picnic areas, playgrounds, pedestrian and bicycle paths, landscaped areas and associated public washrooms. This definition may also be applied to public open space which is not in private ownership and is open to use by the public.

PERSONAL SERVICE BUSINESS means development providing services for personal care and appearance, physical and mental health services, services for cleaning, servicing, altering and maintenance of personal effects and accessories. This use includes barbershops, beauty salons, clinics, counselling services, medical offices, tailors, diet centers, shoe repair shops, dry cleaners, upholstery and rug cleaners, and Laundromats.

PRE-FABRICATED BUILDING MANUFACTURER means development used for the manufacturing, fabricating, processing, assembly, production and/or packing of pre-fabricated buildings, as well as administrative offices and warehousing and wholesale distribution uses which are accessory uses to the above, provided that the use does not generate any detrimental impact, potential health or safety hazard or nuisance beyond the boundaries of the developed portion of the site or lot upon which it is situated.

PUBLIC BUILDING OR USE means a building or facility that is owned and/or administered by any level of government or a corporation which is an agent of the Crown under federal or provincial statute, or a registered charity or society, for the purpose of furnishing services or commodities to the public.

PUBLIC DAY USE AREA means a public area of land provided for use during daylight hours that is owned and/or administered by any level of government.

R

RECREATION FACILITY means a development, constructed for the purpose of housing or supporting sports or recreational activities. The facility typically involves a fee for use or where admission is by membership to a club, organization or association. Typical facilities would include athletics clubs, roller skating rinks, bowling alleys, paint ball facilities, and racquet clubs. Facilities associated with the operation may include eating facilities, administrative offices and retail operations, provided that any such operation is accessory and clearly incidental to the principal recreational use.

RECREATIONAL VEHICLE means a transportable living unit, designed to be moved on its own wheels or by other means (including units permanently mounted on trucks), designed or constructed to be used for sleeping or living purposes on a short-term, temporary basis. Such living units are subject to highway safety standards rather than housing standards. Typical units include, but are not limited to motor homes, a campers, holiday trailers, travel trailers, fifth wheel trailers, and tent trailers. These units are not allowable as a permanent **DWELLING** (see definition).

RECREATIONAL VEHICLE PARK means a lot or parcel of land intended for temporary occupancy by two or more recreational vehicles for travel, recreation, seasonal, or vacation usage for periods of stay subject to an approved conceptual scheme or area structure plan and its provisions. Uses where unoccupied recreational vehicles are offered for sale or lease, or are stored, are not included. Associated structures in a recreational vehicle park may include laundry facilities, restrooms, showers, sanitary dump facilities, water stations, playgrounds or storage areas intended to serve the needs of the residents of the park. Also see **CAMPGROUND**.

RECREATIONAL VEHICLE STORAGE means the storage, outdoors or inside a permanent structure, of recreational vehicles as defined in this Bylaw, and other recreational or off-road vehicles including, but not limited to, boats, trikes, quads, personal watercraft, snowmobiles and trailers used to transport recreational vehicles.

RECYCLING FACILITY means a development used for the buying, collection, sorting, temporary storage of and processing for the preparation of shipment discarded and recyclable articles where most of the storage is contained within an enclosed building but may include limited outdoor storage. This definition does not apply to **WASTE MANAGEMENT SITES** or **AUTO RECYCLING AND SALVAGE YARD**.

RELIGIOUS ASSEMBLY means development owned by a religious organization used for worship and related religious, philanthropic or social activities and includes accessory rectories, manses, meeting rooms, classrooms, dormitories and other buildings. Typical facilities would include churches, chapels, mosques, temples, synagogues, parish halls, convents and monasteries.

RENEWABLE ENERGY, COMMERCIAL/INDUSTRIAL means energy that is renewable or sustainable that is generally derived from natural sources (for example, the earth, sun, wind, water). Typically, this use will include commercial systems for the production and sale of energy generated by the following but not limited to solar photovoltaic, solar thermal, geo-exchange, wind, micro-hydro, carbon capture and storage, biofuel or fuel cell.

RENEWABLE ENERGY, INDIVIDUAL means energy that is renewable or sustainable that is generally derived from natural sources (for example, the earth, sun, wind, water) and is for the sole consumption of the landowner, resident or occupant on the subject site, or a site immediately adjacent to the subject site.

RESIDENTIAL USE IN CONJUNCTION WITH AN APPROVED COMMERCIAL OR INDUSTRIAL USE means a residential unit that is part of a commercial or industrial building so that the dwelling unit is a supplementary use to that principal use.

RESTAURANT means a commercial development where food and beverages are prepared and served. The development may include supplementary alcoholic beverage service and catering services. This term will include restaurants, cafes, diners, lunch and tea rooms, ice cream parlors, banquet facilities, take-out restaurants and such other uses as the Development Authority considers similar in character and nature to any one of these uses.

RETAIL means a commercial premise where goods, merchandise, substances, articles, and other materials, are offered for sale to the general public and includes limited on-site storage or limited seasonal outdoor sales to support that store's operations. Typical uses include but are not limited to grocery, bakery, hardware, pharmaceutical, appliance, clothing, and sporting goods stores. These uses exclude warehouse sales and the sale of gasoline, heavy agricultural and industrial equipment, retail stores requiring outdoor storage, liquor or retail cannabis stores. Minor government services, such as postal services, are permitted within general retail stores.

RIDING STABLE/ARENA means a private or public compound or facility designed with stalls for the housing, bedding and/or confinement of animals (any animal) used for riding purposes. The facility may also include outdoor features such as corrals, riding areas, training areas, associated storage structures and parking areas for users.

RODEO GROUNDS means an agricultural-recreation oriented facility where livestock, animal husbandry and exhibitions of the speed, breeding and management are exhibited and showcased. Typically, the site will also include the associated facilities such as an arena, chutes and corrals, stables, concession booths, grandstands and parking to carry out such purpose. The facility may be managed by civic, private or non-profit organizations.

S

SAND AND GRAVEL OPERATIONS – see **NATURAL RESOURCE EXTRACTION/PROCESSING**

SANDBLASTING FACILITY means a development of buildings where the major source of activity involves the large scale sandblasting of agricultural, industrial, automotive or oilfield equipment. Sandblasting facilities may also include welding and painting facilities on-site.

SCHOOL means a place of instruction operated with or without public funds pursuant to the *School Act*.

SEA-CAN – see **SHIPPING CONTAINER**

SECONDARY SUITE means a subordinate dwelling unit located within or attached to a single detached dwelling.

SECURITY SUITE means a dwelling unit or portion of a building used to provide accommodation for security personnel and in commercial, recreational, or industrial districts shall contain no more than one bedroom and be no larger than 55.7 m^2 (600 ft^2).

SEED CLEANING PLANT means a building or facility used for the storage and preparation of seed used in **AGRICULTURAL OPERATIONS**.

SENIOR CITIZEN HOUSING means development, including lodges, which is used as a residence for elderly individuals not requiring constant or intensive medical care.

SHIPPING CONTAINER means any container that is or was used for transport of goods by means of rail, truck or by sea. These are generally referred to as a Sea-Container, sea cargo container, sea can or cargo container. Such containers are typically rectangular in shape and are generally made of metal. For the purposes of this Bylaw, when such a container is used for any purpose other than transporting freight, it will be considered as a structure, must conform to these regulations and may require a permit.

SHOOTING RANGE means an area, building or structure, typically operated by a non-profit organization, that is designed or intended for the safe discharge, on a regular and structured basis, of firearms, archery, or other projectiles, including but not limited to rifles, shotguns, pistols, silhouettes, skeet, trap, black powder, or any similar firearm, for the purpose of sport shooting, target practice or shooting competitions.

SHORT-TERM RENTAL 1 means the operation of commercial accommodation within all or a portion of a dwelling unit, including a Secondary Suite(s) or a room(s) in or a portion of a dwelling unit, for a period not exceeding 30 days, and the owner or property manager of the property is required to occupy the dwelling (within the same suite or an attached suite), or an adjacent dwelling on the same parcel, as their primary residence and be present on the premises during the majority of the operation of the Short-Term Rental. For the purposes of this Bylaw a Short-Term Rental 1 includes a Bed and Breakfast.

SHORT-TERM RENTAL 2 means the operation of short-term commercial accommodation within all or a portion of a dwelling unit, including a Secondary Suite(s), or a room(s) in or a portion of a dwelling unit, for a period not exceeding 30 days, and the owner of the property is not required to occupy the dwelling unit as their primary residence.

SIGN means any development, either temporary or permanent:

(a) constructed and permanently affixed directly or indirectly to any building, structure, window or a parcel of land; and/or

(b) which is used to advertise, identify or display a commercial or non-commercial activity, product, place, organization, institution, person, service, event or location, by any means, including words, letters, figures, design, symbols, fixtures, colours, illumination or projected images and in such a manner as to be visible from any public place, but does not include any real estate sign, window display, political poster, flags, graffiti, athletic scoreboards or any traffic or directional and information signage erected by the County, the provincial or federal governments and their agencies.

SOFT-SHELLED BUILDING means a structure, truss or tube-frame building system, which is covered with fabric, generally of canvas, vinyl, plastic, or cotton material, which is typically used as an accessory building or for storage. For use purposes these may be considered as an **ACCESSORY BUILDING**.

SOLAR COLLECTOR FARM means a grouping of multiple devices, panels or structures that are capable of collecting and distributing solar energy at 1 megawatt or greater for the purpose of transforming the solar energy into thermal, chemical, or electrical energy, and typically will tie-in and feed or sell power to the provincial electrical grid transmission or distribution system for off-site consumption. This use includes any associated solar panels, solar modules, supports or racks, inverters, electrical transformers or substations required for the transformation of the solar energy. For use purposes these may be considered as a **RENEWABLE ENERGY, COMMERCIAL/INDUSTRIAL**.

STRIPPING AND SALE OF TOPSOIL involves the removal of topsoil and the sale or trade of such topsoil for commercial purposes.

T

TELECOMMUNICATION TOWER means a structure, typically constructed of metal, used to convey telecommunications signals and includes any related ancillary structures. It may also be a shortened tower or antennae on top of a structure.

TRUCK STOP means a commercial operation where a business, service or industry involved in the maintenance, servicing, temporary parking or storage, or report of commercial vehicles is conducted or rendered including the dispensing of fuel products, the sale of accessories and/or equipment for trucks and similar commercial vehicles. A truck stop may also include convenience stores, washrooms and restaurant facilities, and may include showers or overnight accommodation facilities solely for the use of truck crews.

TRUCK TRANSPORTATION DISPATCH/DEPOT means a facility for the purpose of storing and/or dispatching trucks, buses, fleet vehicles, and transport vehicles and may include towing operations. The use may also involve the transfer of goods primarily involving the loading and unloading of freight-carrying trucks, including any warehousing component.

U

UTILITIES refer to any one or more of the following, supporting a planned or approved land use, subdivision, or development, and includes any accessory building that houses equipment or services used in connection with the utility:

(a) systems for the distribution of gas, whether artificial or natural;

(b) waterworks systems (facilities for the storage, transmission, treatment, distribution or supply of water);

(c) sewage systems (facilities for the collection, treatment, movement of disposal of sanitary sewage);

(d) storm sewage drainage facilities;

(e) telecommunications systems;

(f) systems for the distribution of artificial light or electric power;

(g) facilities used for the storage of telephone, cable, remote weather stations or internet infrastructure; and

(h) any other things prescribed by the Lieutenant Governor in Council by regulation;

but does not include those systems or facilities referred to in subclause (a) through (g) that are exempted by the Lieutenant Governor in Council by regulation.

Within the context of this definition, **PUBLIC UTILITY** means a utility that is owned or operated by some level of government, and **PRIVATE UTILITY** means the utility is owned or operated by a non-government entity, private company, publicly traded company or utility agency.

V

VETERINARY CLINIC – see **ANIMAL CARE SERVICE**

W

WAREHOUSING AND STORAGE, GENERAL means a building used for the storage of goods and merchandise. The building may include administrative offices, loading areas, parking areas, storage rooms and the retail sale of goods stored in the warehouse. No outside storage is permitted with this use.

WAREHOUSING AND STORAGE, INDUSTRIAL means development used for either indoor or outdoor storage, warehousing, distribution or trans-shipment of raw materials, partially processed or finished goods, manufactured products, or equipment. Typical facilities would include pipe yards, vehicle or heavy equipment service and storage, lumber yards, storage/warehousing compounds or distribution centres. Generally, no additional processing would occur on site.

WASTE MANAGEMENT SITE means a development for the commercial receiving of spent materials, provided that no detrimental effects or nuisances are generated beyond the parcel upon which it is situated. This use includes a dry waste site, a hazardous waste management facility and a waste sorting station. This use does not include a **RECYCLING FACILITY**.

WELDING SHOP means a commercial operation engaged in the fabrication, assembly or structural repair of machinery, equipment or vehicles by welding. Such a facility may include offices and a general area for the repair and servicing of machinery, equipment or vehicles and storage of parts and equipment related to the operations of the business.

WIND ENERGY CONVERSION SYSTEM (WECS) means a rotating machine which converts the kinetic energy in wind into mechanical energy. If the mechanical energy is used directly by machinery, such as a pump or grinding stones, the machine is usually called a windmill. If the mechanical energy is then converted to electricity, the machine is called a wind generator, wind turbine, wind power unit (WPU) or wind energy conversion (WEC). For the purpose of this Bylaw the following apply to this definition:

(a) **BLADE** means an element of a WECS rotor which acts as a single airfoil, thereby extracting kinetic energy directly from the wind.

(b) **BLADE CLEARANCE** means in reference to a horizontal axis rotor, the distance from grade to the bottom of the rotor's arc.

(c) **HORIZONTAL AXIS ROTOR** means a wind energy conversion system, typical of conventional or traditional windmills, where the rotor is mounted on a downward 5 percent angle to the earth's surface.

(d) **OVER SPEED CONTROL** means a device which prevents excessive rotor speed.

(e) **NACELLE** means the part of the WECS that includes a generator, gearbox or yaw motors and other operating parts that is installed at the top of the tower, and to which the blade(s) are attached, and is responsible for converting wind power to energy.

(f) **MULTI-WECS** means two or more WECS on a parcel or as part of a project. For use purposes these may be considered as a **RENEWABLE ENERGY, COMMERCIAL/INDUSTRIAL**.

(g) **ROTOR DIAMETER** means the largest circumferential path traveled by a WECS' blade.

(h) **SINGLE-WECS** means one WECS. For use purposes these may be considered as a **RENEWABLE ENERGY, INDIVIDUAL**.

(i) **TOTAL HEIGHT** means the height from grade to the highest vertical extension of a WECS. In the case of a WECS with a horizontal axis rotor, total height includes the distance from grade to the top of the tower, plus the distance from the top of the tower to the highest point of the rotor's arc.

(j) **TOWER** means the structure which supports the rotor above grade.

(k) **VERTICAL AXIS ROTOR** means a wind energy conversion system where the rotor is mounted on an axis perpendicular to the earth's surface.

WORK CAMP, LONG TERM means one or more building(s) established for a time period longer than 30 consecutive days, to accommodate persons who are employed in mining, lumbering, construction, drilling, resource exploration and any similar industry, and includes land on which the building or buildings are situated, and the storage of equipment and materials related to the same.

WORK CAMP, SHORT TERM means one or more building(s) established for a limited time period no longer than 30 consecutive days, to accommodate persons who are employed in mining, lumbering, construction, drilling, resource exploration and any similar industry, and includes land on which the building or buildings are situated, and the storage of equipment and materials related to the same.

Schedule 3

DEVELOPMENT NOT REQUIRING A DEVELOPMENT PERMIT

Schedule 3

DEVELOPMENT NOT REQUIRING A DEVELOPMENT PERMIT

SECTION 1 DEVELOPMENT NOT REQUIRING A DEVELOPMENT PERMIT

In accordance with Administrative Sections 29 and 30, the following rules apply to developments not requiring a development permit.

1.1 This section does not negate the requirement of obtaining all required permits, as applicable, under the *Safety Codes Act* and any other Provincial or Federal statute.

1.2 Notwithstanding that no development permit may be required by the municipality for the uses outlined below, any development within 300 m (984 ft) of the limit of a provincial controlled highway or within 800 m (2,625 ft) from the centre point of an intersection of a controlled highway and a public road would require the benefit of a permit from Alberta Transportation. This includes dugouts, shelter belts, animal shelters, etc.

1.3 The following developments shall not require a development permit:

(a) any use or development exempted under section 618(1) of the *MGA*;

(b) any use or development exempted by the Lieutenant Governor in Council pursuant to section 618(4) of the *MGA*;

(c) any use or development exempted under the *Planning Exemption Regulation*;

(d) telecommunication antenna systems that are regulated by Innovation, Science and Economic Development Canada subject to Schedule 6, Telecommunication Siting Protocols;

(e) the completion of a building which was lawfully under construction at the date this Bylaw came into effect provided that the building is completed in accordance with the terms and conditions of any development permit granted;

(f) the completion of a building that did not require a development permit under the previous Land Use Bylaw and which was lawfully under construction provided the building is completed within 12 months from the date this Bylaw came into effect;

(g) the installation, maintenance or repair of public works buildings, services, and utilities carried out by or on behalf of federal, provincial, municipal, or public authorities on land which is publicly owned or controlled;

(h) highways, roads, pipelines or any other development exempted under the *MGA*, or any other provincial act or regulation, which in the opinion of the Development Authority are associated with the construction, repair or upgrade of said development.

1.4 The following developments shall not require a development permit, but must otherwise comply with all other provisions (i.e. setbacks to roads and property lines) and any applicable standards (Schedules 4 and 5) of this Bylaw. Where an exemption is tied to a certain threshold, a proposal that exceeds the threshold must apply for and obtain a development permit.

(a) any agricultural use, building or structure associated with extensive agriculture or grazing (including corrals, stockpiles, haystacks, pole-barns, fencing, grain bins, sheds and barns – not including confined feeding operations) not located:

(i) within 38.1 m (125 ft) from the centre line of any public roadway;

(ii) in a flood hazard area, or within 152.4 m (500 ft) of the boundary of an established flood hazard area (where a flood hazard area has been established);

(iii) within 10.0 m (33 ft) of the centreline of a BRID irrigation pipeline or 3.0 m (10 ft) of a registered right-of-way or easement for any irrigation pipeline or irrigation canal, whichever is greater;

(iv) within 60.1 m (200 ft) from any BRID or Alberta Environment water reservoir measured from the water's edge at full supply level (FSL) or 30.5 m (100 ft) from the registered reservoir right-of-way, whichever is greater; or

(v) within 30.5 m (100 ft) from the high-water mark of a naturally occurring water body.

Any use, building or structure proposed to be located within the above stipulated setback distances will require a development permit application to be submitted for the consideration of a setback waiver;

(b) a dugout;

(c) a category 1 sign (in accordance with Schedule 5);

(d) a category 3 sign (in accordance with Schedule 5);

(e) a home occupation 1;

(f) extensive agriculture or grazing of land;

(g) the erection and maintenance of fences;

(h) the erection or construction of temporary buildings (without dwelling or sleeping units), works, plants, materials, or machinery that are needed, in the opinion of the Development Authority, to erect or construct a development;

(i) the installation, maintenance or repair of public works, services and utilities carried out by, or on behalf of federal, provincial, municipal or public authorities on land which is publicly owned or administered;

(j) the extraction and processing exclusively by Vulcan County, its authorized agents or Alberta Transportation, of sand, gravel, or other earth materials and including asphalt or concrete mixtures for any County purpose within the County;

(k) the carrying out of works of maintenance or repair to any building, if such works do not include structural alterations or major works of renovation, the creation of a dwelling unit, an increase of parking requirements, or resulting in a change of use;

(l) garden sheds, tool sheds, shipping containers and similar accessory buildings provided that:

(i) the accessory buildings do not exceed 10 m^2 (107 ft^2) in area,

(ii) only one such building is located on a lot,

(iii) any matter pertaining to the development of such a building including its height, exterior finish and location, complies with the provisions of this Bylaw and the schedules thereto;

(m) soft shelled (i.e. tent garages) provided that:

(i) the structure does not exceed 10 m^2 (107 ft^2) in area;

(ii) only one such structure is located on a lot;

(iii) any matter pertaining to the development of such a building including its height, exterior finish and location, complies with the provisions of this Bylaw and the schedules thereto;

(n) public utility buildings;

(o) landscaping that does not result in a change of grade that will negatively affect an adjacent property;

(p) the erection of towers, flag poles and other poles not exceeding 12.2 m (40 ft) in height;

(q) roof or wall-mount solar collectors (Renewable Energy, Individual);

(r) single wind turbines (Renewable Energy, Individual) which are roof mounted or on a tower not exceeding a total height of 12.2 m (40 ft);

(s) decks or patios connected to and used in association with a dwelling unit;

(t) satellite dishes less than 1 m (3.3 ft) in diameter;

(u) camping units, not in excess of any maximum that may have been established in a development permit, used for intermittent seasonal residential/recreational use within an approved campground;

(v) temporary outdoor swimming pools and above ground hot tubs;

(w) the installation of asphalt, concrete, brick, stone, wood or aggregate driveways, sidewalks, patios or steps;

(x) the stripping of any topsoil to accommodate a building or other development provided that an approved development permit exists in support of the activity and the topsoil is not removed from the parcel concerned;

(y) shipping containers which are used for purposes accessory to an agricultural use in the Rural General "RG" land use district;

(z) not more than two shipping containers which are used for purposes accessory to an agricultural use in the Reservoir Vicinity "RV" and Urban Fringe "UF" land use districts;

(aa) not more than one shipping container which is used for purposes accessory to a dwelling unit use in the Rural General "RG," Reservoir Vicinity "RV," Urban Fringe "UF," Single Lot Country Residential "SCR," and Small Holdings "SH," land use districts;

(ab) not more than two shipping containers which are used for purposes accessory to a commercial or industrial use in the Rural Industrial "RI," and Rural Commercial "RC," land use districts;

(ac) utilities developed in accordance with an approved subdivision or development.

1.5 If there is any question whether or not a development requires a development permit, the matter shall be referred to the Municipal Planning Commission, whose decision shall be final.

Schedule 4

LAND SUITABILITY AND SERVICING REQUIREMENTS

Schedule 4

LAND SUITABILITY AND SERVICING REQUIREMENTS

SECTION 1 APPLICABILITY

General

1.1 The provisions of this Schedule apply to all districts unless otherwise stated.

SECTION 2 ACCESS

General

2.1 A parcel has access when it abuts either a public road or a private road approved in a condominium plan developed to full County standards.

2.2 Vulcan County reserves the right to determine the most suitable access and egress point(s) onto a developed or undeveloped road with regard to any new accesses in the municipality at the time of application for development permit or subdivision.

2.3 As a condition of subdivision or development approval, the Development Authority may require the construction of new approaches, upgrading of existing approaches and/or removal of approaches to achieve the desired long-term planning and transportation objectives of the County.

2.4 If a parcel does not have access to a developed road to County Standards as outlined in the County Design Guidelines, the Development Authority shall require the applicant to develop a road to County Standards to provide access within the public road right-of-way.

2.5 The Development Authority may impose a condition requiring the applicant to enter into a development agreement to construct or pay for the construction or upgrading of public roads necessary to serve the development or subdivision.

2.6 No use, development or subdivision shall be allowed without provision for congruent legal and physical access.

Parcels Without Access

2.7 When the only public roadway that the parcel abuts is an undeveloped road allowance or a road not developed to County Standards, the parcel does not have access.

2.8 Notwithstanding the land use rules for the land use district in which a parcel of land is located, all listed uses are discretionary when a parcel does not have access as described in 2.7.

Easements

2.9 The Development Authority may allow access by way of easement if deemed appropriate. In such case, the agreement, which shall deal with any matters required by the Development Authority, shall be registered on title and shall not be discharged without the authorization of the Development Authority.

Construction of Approaches

2.10 As a condition of development or subdivision approval, the Development Authority may require the construction of new approaches, upgrading of existing approaches and/or the removal of existing approaches to achieve desired access management objectives.

2.11 All approaches shall be constructed or upgraded to the satisfaction of the Public Works Department in accordance with County Design Guidelines. Where required, adjustments to approaches shall be at the cost of the applicant.

Access to and Development near Provincial Highways

2.12 All accesses onto provincial highways shall be approved by Alberta Transportation. All access to a provincial highway is considered temporary. Alberta Transportation will review any development adjacent to a provincial highway and determine whether an access, existing or proposed, is acceptable.

2.13 All land redesignations and new developments that will cause intensified or increased use of any access to provincial highways shall be approved by Alberta Transportation.

2.14 Provincial legislation may require that Alberta Transportation issue a Roadside Development Permit when development takes place in proximity of the provincial highway system.

2.15 Any development within the right-of-way or within 300 m beyond the limit of the highway or within 800 m from the centre point of the intersection of the highway and another highway would require the benefit of a permit from Alberta Transportation.

2.16 A Traffic Impact Assessment (TIA) may be required to be prepared by Alberta Transportation at the sole cost of the developer or landowner to ensure that the existing at-grade local intersection with provincial highways would be adequate to accommodate the additional traffic that may be generated by the proposed development.

SECTION 3 WATER BODIES AND RIVER VALLEYS

3.1 The Development Authority may place development related conditions, including setbacks, on an application for development approval that may impact a water body, riparian area and/or environmentally significant area in accordance with the management practices outlined in *Stepping Back from the Water* (Government of Alberta, 2012) and/or the *"Environmentally Significant Areas in the Oldman River Region"* (Cottonwood Consultants, 1988).

3.2 An application for subdivision or development shall be required to identify all wetlands within the project area. Where required by the Development Authority, a professionally prepared wetland assessment shall be submitted prior to a decision on an application. Activities that may impact a wetland are expected to follow the *Alberta Wetland Policy's* mitigation hierarchy by seeking first to avoid, then minimize, then reclaim impacts to wetlands.

3.3 Land areas identified as permanent wetlands or that have wetland status as identified by Alberta Environment and Parks are considered generally unsuitable for the majority of developments and may be denied a development permit at the discretion of the Development Authority.

3.4 Before approving any application to locate or expand a land use in or adjacent to a river valley or shoreland area, the Development Officer shall refer such an application to any local, regional, provincial or federal government agency that, in its opinion, has an interest in land use management.

3.5 No application to locate or expand a land use in or adjacent to a river valley or shoreland area shall be approved unless, in the opinion of the Development Authority, the proposal will not:

(a) be located in a flood prone area;

(b) cause soil erosion or damage to a riverbank;

(c) cause deterioration of water quality;

(d) hinder the flow of water to the river;

(e) compromise aesthetic quality or natural amenities;

(f) be detrimental to area of ecologically sensitive habitat or of historic or scenic importance;

(g) have a detrimental effect on adjoining or nearby agricultural operations if the proposed development is for a non-agricultural use;

(h) have a detrimental effect on existing or proposed recreation areas; or

(i) have a detrimental effect on existing or proposed irrigation canals or water diversion structures.

SECTION 4 LANDS SUBJECT TO FLOODING

Figure 4.1

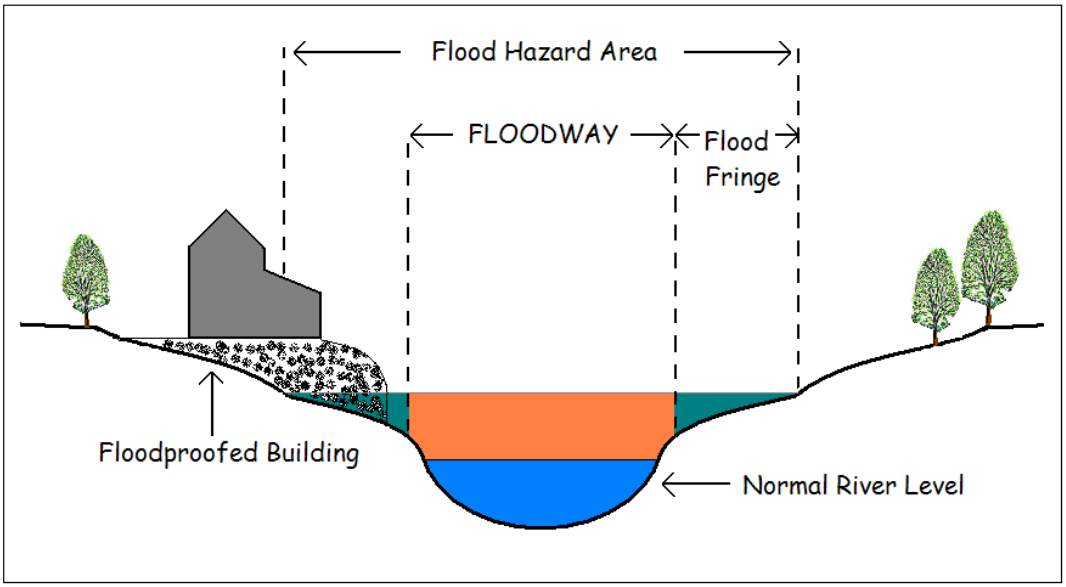

NOTE TO READER: *Under section 693.1 of the MGA, the Lieutenant Governor in Council is empowered to enact regulations that rearticulate the meaning of floodway, and that control or outright prohibit the use or development of land located in a floodway within a municipality. Should such regulations be brought into force, Vulcan County will be required to amend this Bylaw as necessary to ensure it complies with all provisions in the regulations. Currently, existing technical studies offer guidance to the County: the Siksika Bow River Hazard Study (Golder Associates, 2019) includes flood inundation maps intended to inform emergency response planning and infrastructure design. Phase 1 Little Bow River Modelling: Flood Mitigation Effects Assessment (Advisian, 2017) characterizes the change in flood hazard and effects associated with residential lands and infrastructures in the context of the 2013 flood.*

4.1 The Development Authority may refuse to approve an application for subdivision or development if it is of the opinion that the parcel or development will be located within the flood hazard area, or if it cannot be clearly demonstrated to the satisfaction of the Development Authority that the parcel will not be subject to flooding.

4.2 New development within the flood hazard area, as shown in Figure 4.1, shall be strongly discouraged; however, should the Development Authority consider it appropriate, a development may be allowed subject to the following requirements:

(a) development shall be restricted to non-residential buildings or structures that can be adequately protected to minimize potential flood damage;

(b) the first floor and mechanical and electrical installations within any structures or buildings shall be a minimum of 0.6 m (2 ft) above the flood elevation level corresponding to the design flood; and

(c) buildings shall have no “finished” floor space developed below the flood elevation level corresponding to the design flood.

4.3 The applicant must provide information on the grade elevations of the proposed building site, the building itself, as well as the building openings and mechanical or electrical equipment all referenced in geodetic elevations.

4.4 Before a development permit is issued in a flood hazard area, the Development Authority may require that the applicant provide a certificate containing the seal and signature of a professional engineer or architect indicating that the requirements listed above have been met and that the building or structure is adequately protected against flood damage to the flood elevation level corresponding to the design flood.

4.5 The Development Authority may consult with Alberta Environment and Parks or other qualified organizations or individuals to assist in determining high-water marks, flood hazard areas, banks and the level of a lake, dam, river or other waterway taking into account design flood elevation levels, wind set-up and wave run-up.

4.6 Where flood hazard area data is not available but the Development Authority believes that lands may be subject to flooding, the Development Authority may require that development requiring a development permit be set back such distance as the Development Authority considers reasonable and appropriate to minimize the risk of flooding.

4.7 Where a proposed development is granted permission to locate within the flood fringe of a flood hazard area of any water body, the Development Authority may request the developer to provide any of the following requirements prior to the issuance of a development permit:

(a) the registration of a Save Harmless Agreement against the title indemnifying the municipality in case of a subsequent flood causing damage to the development;

(b) the design for an appropriate private sewage disposal system to the satisfaction of the appropriate health authority and the *Safety Codes Act*;

(c) a certificate from a qualified Alberta Land Surveyor stating the top of the footings of any proposed development will be at or above the flood hazard area level and proof of such elevation;

(d) submit in writing confirmation that any proposed setback requirements as established by Alberta Environment and Parks or other government department are met or exceeded.

4.8 If, in the opinion of the Development Authority, land upon which development is proposed is subject to flooding, the Development Authority may require the applicant to submit a flood mapping study prepared by a qualified professional engineer demonstrating that any potential hazards can be mitigated.

SECTION 5 LANDS SUBJECT TO SUBSIDENCE OR EROSION

Figure 5.1

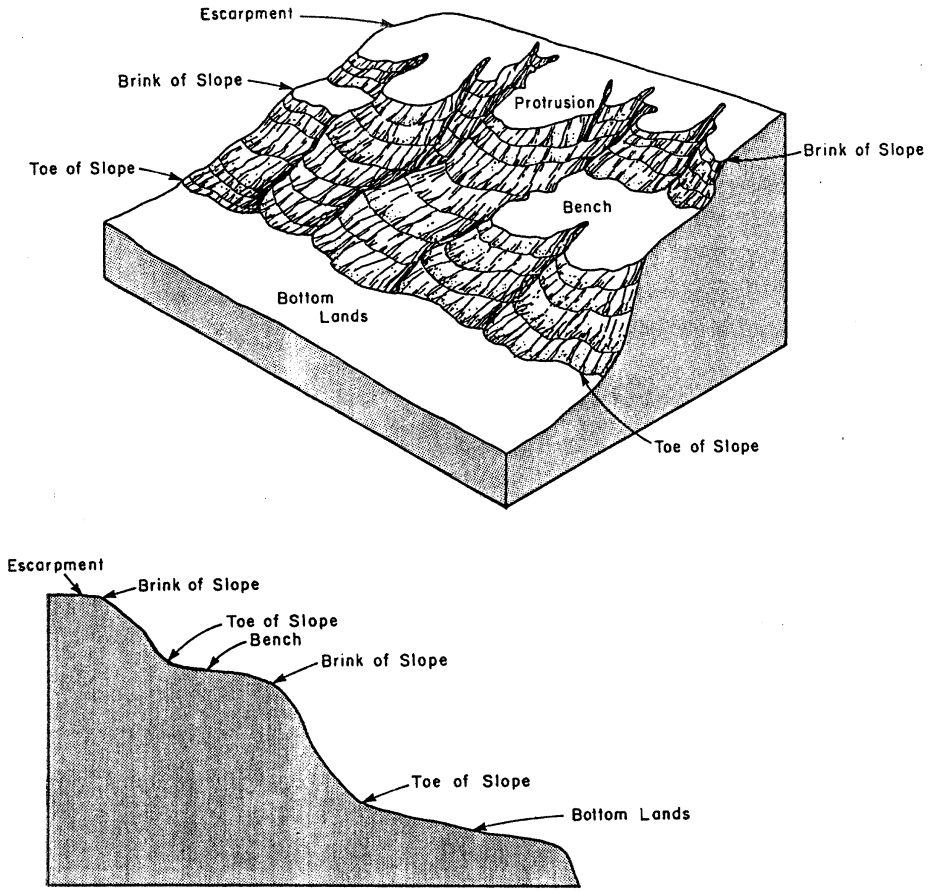

TOPOGRAPHICAL FEATURES

Lands Subject to Subsidence

5.1 If, in the opinion of the Development Authority, land upon which development is proposed is subject to subsidence, the Development Authority may require the applicant to submit a structural building plan prepared and sealed by a qualified professional engineer, and/or a slope stability analysis and/or a geotechnical report prepared by a qualified professional engineer demonstrating that any potential hazards can be mitigated.

Lands Subject to Erosion

5.2 For any proposed subdivision or development on sites with slopes of 15 percent or greater, the Development Authority may require that an applicant submit a professionally prepared geotechnical report. This requirement may be waived for agricultural, grazing and resource extraction uses where no buildings are proposed to be located on the land.

5.3 For the purposes of this section, "top of bank" is as determined by the Development Authority in consultation with Alberta Environment and Parks or a professional engineer.

5.4 Notwithstanding the yard requirements prescribed in the land use districts, no permanent building shall be permitted within the following setbacks:

Setbacks from Escarpment

Average Depth of Valley	Distance of Land Left Undisturbed
0 - 15 m (0 - 49.2 ft)	25 m (82 ft)
15 - 30 m (49.2 - 98.4 ft)	45 m (147.6 ft)
> 30 m (> 98.4 ft)	60 m (196.9 ft)

5.5 Sloped areas, including hummocks, buttes and other isolated land projections, slopes of greater than 20 percent are considered unsuitable for development unless otherwise determined by the Development Officer and all slopes greater than 15 percent may require special engineering and other treatment. If these topographic features are levelled, resulting slopes shall not exceed 15 percent and the levelling, compacting and other engineering, as well as environmental considerations, must be to the satisfaction of relevant authorities. Related to the foregoing, satisfactory proposed contour and other plans may be required.

5.6 Unless otherwise determined by the Development Authority, setbacks from toes of slopes shall be a minimum of 9.1 m (30 ft) from the toe of a slope.

SECTION 6 CONTAMINATED LANDS AND BROWNFIELD DEVELOPMENT

6.1 Any application for either subdivision or development that is proposed on lands or in an area known or deemed to potentially contain contaminated lands, or is the site of former chemical, pesticide, heavy industrial, railway associated, mining, oil and gas processing or storage, gas station, automotive related uses or other similar type uses, may be subjected to special information requirements and conditions, including but not limited to, professional engineering and geotechnical studies, environmental assessments, water reports and soils analysis being submitted to the municipality in addition to any other applicable requirements.

6.2 Notwithstanding that a use of land may be permitted or discretionary in a land use district, the Development Authority may:

(a) request that a professionally prepared geotechnical analysis be submitted at the applicant's expense;

(b) depending on the nature of the hazard, request that an Environmental Site Assessment (ESA) as prepared by a qualified professional be submitted at the applicant's expense.

(c) refuse to issue a development permit or approve a subdivision, if the Development Authority is of the opinion that the site of the proposed development or use is not safe or poses a potential health or liability risk, based on the information provided; or

(d) if approving a development permit or subdivision, place conditions on the approval to mitigate or address potential or identified hazards, health risks, contamination or site-specific land concerns, including but not limited to:

(i) providing professional remediation, reclamation or clean-up of the parcel or site at the applicant or landowner's expense;

(ii) limiting or restricting development on the parcel or applying special setbacks to address the location of improvements on site;

(iii) providing professional engineering or geotechnical reports bearing the seal of a licensed engineer to support or verify any aspects of the proposal or condition of the land;

(iv) having the landowner or applicant post bonds or other security as it relates to the estimated costs of the reclamation or clean-up of the parcel;

(v) signing a legal agreement to indemnify and save harmless the municipality from all potential actions, suits, damages, or claims as it relates to the development of the land and any development permit being issued or subdivision approval;

(vi) any other reasonable conditions to ensure the development or subdivision may be approved as safe as reasonably possible and is suitable for the land.

SECTION 7 ENVIRONMENTALLY SIGNIFICANT AREAS (ESAs)

7.1 Prior to making a decision on a subdivision or development application, the Development Authority may require an applicant to provide further studies by qualified professionals identifying the important aspects of land known or suspected to be environmentally significant.

(a) The Development Authority may consider the *"Environmentally Significant Areas in the Oldman River Region" (Cottonwood Consultants, 1988)* or other provincial information resources to determine the location of environmentally significant areas or features which may be required to be addressed.

(b) When an Environmental Site Assessment is required it shall be prepared consistent with the *Alberta Environmental Site Assessment Standard*.

7.2 Notwithstanding that a use may be permitted or discretionary in the land use districts of the bylaw, the Development Authority may, at its discretion, either stipulate development setbacks or restrict development from identified environmentally significant or sensitive areas as a condition of subdivision or development permit approval.

SECTION 8 SOLID WASTES DISPOSAL

8.1 All refuse on any construction site shall be properly screened from view and contained in an approved enclosure until such time as disposal occurs.

8.2 In all land use districts, refuse and garbage shall be stored in suitable containers. Refuse and garbage holding areas, including containers, shall be effectively screened from public view.

SECTION 9 DRAINAGE, GRADING AND RETAINING WALLS

9.1 All development shall be required to establish and maintain parcel grading in such a manner that all surface water will drain from the building and other site improvements.

9.2 The Development Authority may require the applicant of a development to provide at their expense, a lot grading or finished elevation plan prepared by an Alberta Land Surveyor, professional engineer or architect as part of the information requirements in considering an application or as a condition of approval.

9.3 The Development Authority may establish parcel and building elevations if it is believed that drainage from existing elevations will affect adjacent parcels.

9.4 The Development Authority may require as a condition of development approval:

(a) engineered grading and drainage plans for the development;

(b) a legal land survey demonstrating that post-construction engineered grades have been met;

(c) grading and other measures, as appropriate, to control surface drainage, reduce or eliminate grade difference between adjacent lots, and minimize erosion or slope instability.

9.5 The Development Authority may refuse to approve a development permit or a subdivision application if it cannot be demonstrated that storm water drainage can be suitably managed.

9.6 All protrusions of escarpments that are removed or levelled must result in grades where the protrusion formerly existed of not greater than 15 percent, not including the adjoining escarpment wall.

9.7 A maximum slope of 33 percent shall result for escarpment lands where protrusions are removed or levelled (i.e. for the escarpment wall formed by the cut of the former protrusion).

9.8 Any protrusion of escarpments with a minimum width of 90 m (295 ft) at its widest point shall not be removed.

9.9 The Development Authority may require the construction of a retaining wall as a condition of a development permit if, in its opinion, significant differences in grade exist or will exist between the parcel being developed and adjacent parcels.

SECTION 10 STORM WATER MANAGEMENT

10.1 The Development Authority may require the applicant of a development or subdivision to provide at their expense, a storm water management plan prepared by a professional engineer as part of the information requirements in considering an application or as a condition of approval.

10.2 All storm water management plans submitted to the municipality must be prepared to the satisfaction of the Development Authority in accordance with Alberta Environment and Park's *Stormwater Management Guidelines for the Province of Alberta* and County Design Guidelines.

10.3 When Alberta Environment and Parks approval is required for a storm water management plan, the applicant is responsible for obtaining the necessary approval and filing a copy of the approval or refusal with the municipality once the application decision has been issued by the provincial department.

NOTE TO READER: *Under the Environmental Enhancement and Protection Act, Alberta Environment and Parks approval for storm water projects is typically required for piped storm drainage collection systems, stormwater treatment facilities such as wetponds and dryponds, and piped stormwater outfalls (contact AEP for complete requirements).*

10.4 Stormwater management facilities, specifically proposed development adjacent to a provincial highway, requires stormwater management approval from Alberta Transportation and any other provincial or municipal regulatory departments or agencies.

SECTION 11 WATER SUPPLY

NOTE TO READER: *In Alberta, water is owned by the Crown and its use is regulated by Alberta Environment and Parks under the Water Act. Except where exempted for eligible agricultural or household use, a license is required for the diversion of surface water or groundwater. In accordance with the Approved Water Management Plan for the South Saskatchewan River Basin, new surficial diversions are not allowed.*

Potable Water

11.1 The Development Authority shall refuse to approve an application for subdivision or development if the proposed source of potable water, as defined in the *Potable Water Regulation*, is deemed to be not acceptable or cannot be verified.

Water wells

11.2 In accordance with section 23(3) of the *Water Act*, an application for a multi-lot (more than five parcels) subdivision proposing to use water wells must be accompanied by a water report prepared by a professional engineer or professional geologist stating that the diversion of 1250 cubic metres per year for each of the parcels being created as a result of the subdivision will not interfere with any household users, licensees or traditional agriculture users who exist when the subdivision is approved.

SECTION 12 SEWAGE DISPOSAL

General

12.1 Where a development requires a means of sewage disposal or treatment, the developer shall be required to install a sewage disposal system in accordance with County Design Guidelines or other system as approved by the municipality. The Development Authority may refuse to approve an application for subdivision or development if the parcel on which it is proposed is not large enough to support a sewage disposal system to the standard required.

On-Site Private Sewage Systems

12.2 The Development Authority shall require, as a condition on a development permit for a dwelling or building that requires a private septic sewage system that the applicant be responsible for

having the private septic sewage system installed to meet all provincial regulations or standards including the Alberta Private Sewage Systems Standard of Practice.

12.3 The Development Authority may ask for a professional soil test/analysis at any time it is of the opinion it is warranted to determine the soil characteristics and the suitability of the land for private sewage septic systems in relation to the development or subdivision proposal. The soils test/analysis must be carried out in accordance with the Alberta Private Sewage Systems Standard of Practice.

12.4 All components of an on-site private sewage treatment systems, whether a septic tank and treatment field, holding tank or lagoon/pond, must be located entirely within the legal property boundaries of the dwelling or building the system is associated with.

12.5 The private sewage treatment system must be setback from the various attributes and property lines of the site, as stipulated in the Alberta Private Sewage Systems Standard of Practice.

12.6 Sewage holding tanks are a method of private sewage disposal that may be considered for approval by the Development Authority at its sole discretion if the volume of daily waste produced is considered low and only if no other reasonable alternative is available.

Communal Treatment Systems

12.7 For grouped country residential or other multi-lot developments, communal treatment systems may be considered as an acceptable method to treat sewage effluent. In determining the suitability of allowing such systems, the Municipal Planning Commission may take any or all of the following into consideration:

(a) the type of system proposed, and the technology involved in the treatment;

(b) the engineering specifications and documented operating record of such systems;

(c) the projected life cycle of such a system;

(d) the annual maintenance and operating costs;

(e) the required monitoring and reporting of the system and what level of certification of the operator is required;

(f) the proposed access, fencing, and security of the infrastructure associated with the treatment system;

(g) the location of the system and its associated infrastructure or disposal area and the proximity to adjacent or nearby land uses;

(h) if a setback waiver request to Alberta Environment and Parks is needed in relation to any nearby or proposed residences determined to be located within the provincially regulated 300 m (984 ft) setback requirement of the *Subdivision and Development Regulation*s;

(i) the proposed ownership or the parcel (i.e. PUL dedicated to Vulcan County);

(j) comments or recommendations from Alberta Health Services, Alberta Environment and Parks, and any other government or referral agency;

(k) any other matter Vulcan County deems relevant to the proposal and consideration of approval of the treatment system.

12.8 At its sole discretion and prerogative, the Municipal Planning Commission may accept or may refuse to approve or accept any communal sewage treatment system.

12.9 The costs related to the preparation of an engineering report and application to be submitted to Alberta Environment and Parks, in support of a setback waiver request in relation to the provincially regulated 300 m (984 ft) setback requirement to a communal sewage treatment system, shall be borne entirely by the developer.

12.10 If approving a communal sewage treatment system, the Municipal Planning Commission may, at the time of subdivision or development, require the developer to enter into a development agreement with the municipality for the construction and installation of the system necessary to serve the subdivision or development at the applicant's expense.

Municipal Treatment Systems

12.11 If a development is proposing to install, extend, or connect to a municipal sewage treatment system, the Municipal Planning Commission may consider approval of such requests at its own discretion. An applicant proposing this method will be requested to obtain written authorization from the municipality consenting to such prior to a subdivision or development permit application being deemed complete, unless a different method of consent has been specified in a statutory plan or other agreement with the municipality.

Schedule 5

STANDARDS OF DEVELOPMENT

Schedule 5

STANDARDS OF DEVELOPMENT

SECTION 1 ABANDONED WELLS

The *Subdivision and Development Regulation* requires municipalities to ensure that applicants include abandoned well information from the Alberta Energy Regulator (AER) in applications for both subdivisions and development permits. Vulcan County shall meet the legislative requirements of the *Subdivision and Development Regulation* regarding subdivision and development by applying the following policies.

1.1 It the responsibility of the applicant of the proposed subdivision and/or development to take measures to identify any abandoned wells within that property and to apply the required setback.

1.2 The Development Authority shall not deem a subdivision or development permit application complete until the applicant has provided the required abandoned well information from the AER.

1.3 The applicant shall be required to provide the following information:

(a) the AER information, including a map of the search area from the viewer and a statement that there are no wells in the project area or a list and map identifying the location of abandoned wells within the search area (including the surface coordinates, as provided by the viewer or AER Information Services); and

(b) if an abandoned well is present, a detailed site plan must be provided that accurately illustrates the actual well location (i.e. latitude, longitude) on the subject parcel as identified in the field and the setback established in the AER Directive 079 [a minimum 5.0 m (16.4 ft) radius around the well] in relation to existing or proposed building sites.

1.4 If there is an abandoned well located in the area of the proposed surface development, the applicant is advised to contact the well licensee of record for any additional information that may be needed or to physically locate the well, and to discuss the proposed development and abandoned well issue in more detail.

1.5 Notwithstanding a use may be a permitted use or discretionary use, surface structures on top of an abandoned well are not permitted and a minimum 5.0 m (16.4 ft) setback radius around the well shall be maintained.

SECTION 2 ABATTOIRS

2.1 The abattoir must not be located closer than 304.8 m (1,000 ft) to any adjacent residential dwelling (not including residences on the subject parcel).

2.2 Applications for abattoirs shall be referred to Alberta Health Services and Alberta Agriculture and Rural Development for comment prior to a decision being made by the Development Authority.

2.3 The applicant shall be responsible for compliance with the Alberta Health Standards and Guidelines and the Alberta Building Code requirements.

2.4 The facility and all processing must be able to comply with the *Alberta Meat Inspection Act* and Regulations or the *Canada Meat Inspection Act* and Regulations and must be a licensed Federal abattoir or a Provincial abattoir that is inspected by the Regulatory Services Division of the Meat Inspection Branch of Alberta Agriculture and Rural Development.

SECTION 3 AIRPORT AND AERODROMES

In order to ensure that the flight paths of the airport facilities are protected, Transport Canada regulations establish an Obstacle Limitation Surface (OLS) and an Outer Obstacle Identification Surface (OOIS).

Protection Area

3.1 The Airport Protection Area includes:

(a) Obstacle Limitation Surface (OLS);

(b) Outer Obstacle Identification Surface (OOIS);

3.2 The boundaries of the areas in Section 3.1 are those delineated in the maps in Schedule 1.

3.3 Any development proposed of a significant height or that may have an effect on airport operations, within the areas identified as an Airport Protection Area, will be referred to the specific Airport Commission or Authority, the Town of Vulcan, Transport Canada and NavCanada.

3.4 The Development Authority may regulate the height of proposed buildings as it sees fit, in consultation with Transport Canada and NavCanada, and with regard for applicable rules such as Transport Canada's TP312 – Aerodrome Standards and Recommended Practises and TP1247 – Land Use in the Vicinity of Aerodromes.

3.5 Notwithstanding Section 4.4, no use or development exceeding 45 m (148 ft) in height will be allowed within an OOIS.

3.6 The use or operation of a development of any land situated within the Airport Protection Area shall not cause any objectionable or dangerous condition that would interfere with the safe and efficient operation of the airport and the use and operation of a development situated within the Airport Protection Area shall not cause excessive:

(a) smoke, dust, steam or other emissions;

(b) toxic and hazardous matter;

(c) radiation, fire and explosive hazards;

(d) use of electric or electronic equipment; and

(e) accumulation of any material or waste, edible or attractive to birds.

3.7 Applications for development within the Airport Protection Area may be subject to Noise Exposure Forecast (N.E.F.) standards established by the Development Authority.

SECTION 4 ANHYDROUS AMMONIA STORAGE FACILITIES

4.1 For a development application for a bulk anhydrous ammonia storage facility or a residential dwelling in proximity to an existing bulk ammonia storage facility the Development Authority:

(a) shall consider the location of neighbouring residential uses and apply the "Guidelines for the Location of Stationary Bulk Ammonia Facilities" prepared by Alberta Environment and Parks before making a decision on a development application concerning a bulk ammonia storage facility; and

(b) in all instances, a development application for a residential dwelling shall not be approved if it is located within 500 m (1,640 ft) of an established Anhydrous Ammonia bulk storage facility.

SECTION 5 ARCHITECTURAL CONTROLS

5.1 Some areas within the County may have architectural control guidelines in place for the construction of new buildings. Architectural control review of plans must be approved by the Developer's Architectural Control Approval Officer prior to the Development Authority accepting a development permit application.

5.2 The Municipal Planning Commission may:

(a) require architectural control guidelines to be submitted for review and approval by the County prior to subsequently being registered on title; and

(b) stipulate specific development standards, land or building restrictions, or planning related matters to be applied or included in the covenants.

5.3 The County shall not be held responsible for private covenants regarding the enforcement of any applicable architectural controls.

SECTION 6 AUTOMOTIVE REPAIR AND PAINT SHOPS

6.1 Automotive repair and paint shops shall not be located within 76.2 m (250 ft) of the boundary of any property in an acreage residential or grouped country residential land use district.

6.2 All operations associated with automotive repair and paint shop uses shall be contained within a completely enclosed building except where outdoor storage is expressly allowed.

6.3 Where outdoor storage is allowed, such storage shall not be located in the front yard and shall be screened from view from any road or lane. Wherever possible, outdoor storage should not back onto or face an adjacent residential parcel. The Development Authority may place conditions on a development permit approval to require screening.

6.4 The applicant shall be responsible for compliance with Alberta Environment and Parks regulations and guidelines for containing, storing and disposing of paint or fluids.

6.5 For any business that is involved in selling, repairing, or salvaging automotive vehicles, the applicant shall be responsible for compliance with the Alberta Motor Vehicles Industry Council (AMVIC) licensing requirements.

SECTION 7 AUTO RECYCLING AND SALVAGE YARDS

7.1 The site of an Auto Recycling and Salvage Yard shall not be located within 1 km (0.6 mile) from any adjacent residence.

7.2 All vehicles and machinery must be stored within an approved enclosure or compound, and maintenance of the site should be in accordance with the standards deemed necessary for the use of the site in an acceptable fashion at the discretion of the Development Authority.

SECTION 8 SHORT-TERM RENTALS

8.1 No more than one (1) Short-Term Rental unit may be developed on the same property. A Short-Term Rental is not allowed to be developed within a Camping Unit (eg. recreational vehicle, etc.) as defined in this Bylaw.

8.2 The Development Authority may establish the maximum number of occupants for a Short-Term Rental as a condition of approval.

8.3 The owner of a Short-Term Rental 2 shall provide the name and phone number of a local representative who can respond readily to any complaints received with respect to the use.

8.4 The Short-Term Rental shall post its development permit and the approved number of rental units and maximum occupancy in a conspicuous place within the unit.

8.5 Alterations to the principal building for the purpose of a Short-Term Rental may be permitted but shall not change the principal character or external appearance of the principal building.

8.6 All Short-Term Rentals shall contain a washroom facility within the unit.

SECTION 9 BUILDING DESIGN, CHARACTER, APPEARANCE AND QUALITY OF DEVELOPMENT

9.1 The Development Authority may impose conditions to ensure:

(a) that the design, character and appearance of a building is compatible with other buildings in the vicinity unless it is setting a higher standard of design, character and appearance for the land use district or a particular locality;

(b) that the design, character and appearance of the building is consistent with the purpose of the land use district in which the building is located;

(c) that a development complies with any provision of a statutory plan applicable to the design, character and appearance of the building in the district; and

(d) that, where the development is to be located adjacent to or within view of a highway, the Development Authority may require that the design of a building be to a higher standard than that required elsewhere in the County. This may include, but is not limited to:

(i) appearance of building,

(ii) landscaping, and

(iii) access/egress from property.

9.2 The Development Authority may attach reasonable planning related conditions to a development approval which serve to improve the quality of any proposed development within any land use district. Such special conditions may include, but are not limited to, landscaping, paving parking areas, exterior building finishes, setback variations, the control of noise, smoke, smell and industrial wastes.

SECTION 10 BUILDINGS WITH LIVE/WORK UNITS

10.1 A building may be occupied by a combination of one or more of the uses listed for a district and each use shall be considered a separate use and each use shall obtain a development permit.

10.2 A building may only contain uses where those uses are allowed within the particular district.

10.3 An applicant applying for a building with live/work unit(s) must submit a site plan and floor plans for all buildings, identifying each use and indicating the location and area required for each use.

10.4 The Development Authority may require that each use has its own separate utility servicing lines and infrastructure provided.

10.5 The minimum size of a dwelling unit shall be 46.4 m^2 (700 ft^2).

10.6 The dwelling unit shall be part of and contiguous with the building that contains the non-residential use.

10.7 The non-residential component of a live/work unit will be a minimum of 25 percent of the Gross Floor Area.

10.8 Separate entrances shall be provided for the non-residential and residential uses. Each entrance shall have direct or indirect (via a hallway) access to a public street.

SECTION 11 CAMPGROUNDS AND RECREATIONAL VEHICLE PARKS

11.1 For the purposes of this Bylaw, any development that contains or provides for two or more camping units for commercial camping purposes is considered a campground and must apply for and obtain a development permit.

11.2 An application for a development permit shall include:

(a) a site plan illustrating in detail the proposed improvements to the site, including camping areas, roadways, natural barriers, landscaping, perimeter fencing, storage areas, playgrounds and utility areas;

(b) an analysis of the biophysical characteristics of the subject lands, including how environmentally sensitive areas and species shall be protected;

(c) a utility servicing plan indicating how water and sewer will be provided and managed;

(d) floor plans, elevations and sections of the buildings at a minimum scale of 1:200 or such other scale as required by the Development Officer for any proposed buildings;

(e) a business plan including hours and season of operation, number of employees, site security, camping rules, refuse management and any other relevant matters;

(f) a fire and emergency management plan.

11.3 The following design standards shall be adhered to during the development and operation of a campground or recreational vehicle park:

(a) minimum site area of 1.2 ha (3 acres) unless otherwise allowed by the Development Authority;

(b) the campground layout shall promote the conservation and management of habitat, wetlands and coulees/steep slopes;

(c) a minimum 7.6 m (25 ft) natural or landscaped defensible space buffer shall be provided from property line and maintained free of camping stalls or units;

(d) a minimum of 10 percent of the total site shall be set aside in a location suitable to the Development Authority as a common open space recreation area;

(e) each camp site stall must be accessed by an internal road;

(f) internal roads shall be hard surfaced or surfaced to the satisfaction of the Development Authority and shall be:

(i) 3.0 m (10 ft) in width for one-way traffic, and

(ii) 6.0 m (20 ft) in width for two-way traffic;

(g) fires will be permitted only in designated fire pits or other such facilities;

(h) potable water and sewage disposal facilities must be provided to the satisfaction of the Development Authority and to provincial standards;

(i) all campsite boundaries shall be defined on the ground by permanent flush stakes, or markers, with a stall number or other identification system;

(j) minimum camping stall shall be:

(i) 6.0 m (20 ft) in width,

(ii) 18.0 m (60 ft) in depth,

(iii) 108 m^2 (1,200 ft^2) in area;

(k) minimum distance between campsites shall be 3.0 m (10 ft), typically with landscaping or other buffering features;

(l) fences shall be uniform in design and maintained in a safe and attractive condition;

(m) one parking stall per campsite;

(n) visitor parking shall be provided in a common area to the satisfaction of the Development Authority at a ratio of one stall per 10 campsites;

(o) a landscaping plan that retains and supplements natural vegetation shall be provided to the satisfaction of the Development Authority.

11.4 Applications which propose to establish or enlarge a campground or recreational vehicle park shall be evaluated with respect to Alberta Economic Development and Tourism's Minimum Standards for Approved Campgrounds and Trailer Parks.

11.5 Campgrounds and recreational vehicle parks may allow for seasonal stays between May 1 and October 31, or a different period at the discretion of the Development Authority.

11.6 Construction of roads and/or approaches leading to a proposed or enlarged campground or recreational vehicle park may be required as a condition of development approval. An existing road or approach may be required to be upgraded to sustain the volume and type of traffic to be generated by the proposed campground.

11.7 One on-site security/operator suite may be allowed.

11.8 Noise control measures may be required and may include the use of berms, natural barriers and screens and locating noise-insensitive aspects of the campground or recreational vehicle park close to the noise source.

11.9 All facilities shall meet the standards of the *Recreation Area Regulation* and all other public health regulations and be kept in a manner satisfactory to Alberta Health Services.

SECTION 12 CANNABIS PRODUCTION FACILITIES

12.1 The owner or applicant must provide as a condition of development permit a copy of the current licence for all activities associated with cannabis production as issued by Health Canada.

12.2 The owner or applicant must obtain any other approval, permit, authorization, consent or licence that may be required to ensure compliance with applicable federal, provincial or other municipal legislation.

12.3 The development must be undertaken in a manner where all of the processes and functions are fully enclosed within a stand-alone building including all loading stalls and docks, and garbage containers and waste material.

12.4 The development shall not operate in conjunction with another approved use.

12.5 The development shall not include an outdoor area for storage of goods, materials or supplies.

12.6 The development may be required to include equipment designed and intended to remove odours and particulates from the air where it is discharged from the building as part of a ventilation system.

12.7 The Development Authority may require, as a condition of a development permit, a public utility waste management plan, completed by a qualified professional that includes detail on:

(a) the incineration of waste products and airborne emissions, including smell;

(b) the quantity and characteristics of liquid and waste material discharged by the facility; and

(c) the method and location of collection and disposal of liquid and waste material.

SECTION 13 CANNABIS RETAIL STORE

13.1 An application for a development permit shall include:

(a) floor plans, elevations and sections of the buildings at a minimum scale of 1:200 or such other scale as required by the Development Officer, and exterior building signage;

(b) verification of the Alberta Gaming and Liquor Commission (AGLC) eligibility to obtain a licence;

(c) a detailed business plan including hours of operation, number of employees and any other relevant matters;

(d) a detailed listing and site plan of surrounding business and uses, both on adjacent (contiguous) parcels and those identified as sensitive sites (as outlined in Section 14.3 below) within 200 m (656 ft) (drawn on a high quality and clearly legible site plan with text descriptions).

13.2 A Retail Cannabis Store must be a separate use from any other business activities (i.e. non-Cannabis store) unless it is an activity or use expressly authorized by the AGLC.

13.3 A Retail Cannabis Store may not be approved for a development permit if the premises is located within a 100 m distance of:

(a) the boundary of a parcel of land on which a provincial health care facility is located; or

(b) the boundary of a parcel of land containing a school (public or private) facility; or

(c) the boundary of a parcel of land that is designated as a school reserve or municipal and school reserve under the *Municipal Government Act*.

13.4 If at any time an approved cannabis retail store has its AGLC license revoked or the license expires, the development permit issued for the cannabis retail store shall be null and void.

SECTION 14 CAR AND LIVESTOCK TRUCK AND TRAILER WASH FACILITIES

14.1 As part of the complete development permit application requirements for a car or truck wash use, the Development Authority require the applicant to provide verification that there is a secure water source sufficient to service the development.

14.2 A development permit approval for a car or truck wash may be denied, if in the opinion of the Development Authority, there is not a sufficient water source to service the development.

14.3 The building shall be located a minimum of 30.5 m (100 ft) from the boundary of any residential land use district.

14.4 The wash bay and all building surfaces shall be constructed of a material that is durable.

14.5 Lagoons or private sewage septic treatment systems may not be used for handling the grey water resulting from the washing of vehicles if the proposed system is determined to be not suitable by the Development Authority. As a condition of a development permit approval, the Development Authority:

(a) may require the proposed grey water system to be engineered by a qualified professional with a technical report submitted to the satisfaction of the municipality and deemed acceptable; or,

(b) may require the proposed development to be connect to municipal sewage services, if available, at the applicant's expense.

14.6 All facilities shall meet Alberta Environment and Parks standards under the *Environmental Enhancement and Protection Act* and the *Waste Control Regulation*, and/or other applicable rules.

SECTION 15 CHILD CARE FACILITIES

15.1 An application for a development permit shall include:

(a) a site plan of the interior and exterior child care facility areas;

(b) the number of children;

(c) the number of staff employed; and

(d) the submission of a plan that describes how communication with neighbours will be carried out and how neighbourhood compatibility problems are to be resolved.

15.2 In considering the suitability of a building or site for a discretionary child care facility, the Development Authority may consider the appropriateness of the location for child care with regard for the proximity to required services, parks, neighbourhood characteristics, traffic issues or congestion in the neighbourhood, and if the size is adequate to meet program requirements, including outdoor space, parking, and the drop-off zone.

15.3 A child care facility shall only be approved where, in the opinion of the Development Authority, the use would not generate appreciable traffic problems within the area.

15.4 The use requires a minimum of one on-site pick-up and drop-off space for every 10 children/clients. The location of passenger loading zones for child care facilities may be specified by a condition of a development permit.

15.5 Child care facilities should include a secure, outdoor, active play area space available for children on the site, which may be a condition of development permit approval.

15.6 All applications for child care facilities shall, as a condition of approval, obtain the necessary approvals and must be licensed and operate in accordance with the provincial *Child Care Licensing Act*.

15.7 No exterior alterations shall be undertaken to a dwelling or former dwelling which would be inconsistent with the residential character of the building.

15.8 Signage for child care facilities must comply with the following:

(a) a maximum of one sign;

(b) the sign must be no greater than 0.74 m^2 (8 ft^2) in size; and

(c) in a residential land use district, the sign must be located in the building's window.

SECTION 16 DUGOUTS

16.1 No part of any dugout, regardless of size, shall be located within 76.2 m (250 ft) of the centre line of a highway or public road.

16.2 No part of any dugout, regardless of size, shall be located within 7.6 m (25 ft) of a property line in any land use district.

16.3 Dugouts may be allowed closer to the centre line of a highway or public road if a barricade – as outlined in Appendix G – is installed along 100 percent of the length of that part of the dugout fronting the highway or public road and 25 percent of the length of the sides of the dugout.

16.4 The minimum standard of a barricade that may be required around a dugout shall be a post and cable barricade as per Alberta Transportation standards and illustrated on Figures 1, 2, 3 and 4 in Appendix G.

16.5 A dugout or pond is exempt from a development permit if the applicable setbacks to all roadways and property lines are met in accordance with the bylaw.

SECTION 17 EXPOSED FOUNDATIONS AND EXTERIOR BUILDING FINISHES

17.1 The maximum allowable height above the average finished surface level of the surrounding ground of the exposed portion of a foundation may be limited by the Development Authority.

17.2 The Development Authority may require specific finishing materials and/or colours to be used to ensure the compatibility of a proposed:

(a) development with surrounding or adjacent developments;

(b) addition or ancillary structure with existing structures on the same parcel.

SECTION 18 GROUP HOME

18.1 The applicant is required as part of the development permit application, to provide information on the following:

(a) a site plan of the interior and exterior group home areas;

(b) the type of client served;

(c) the number of clients accommodated;

(d) the number of staff employed; and

(e) the submission of a plan that describes how communication with neighbours will be carried out and how neighbourhood compatibility problems are to be resolved.

18.2 A group home, limited or group home, major, may be approved subject to the following conditions and requirements:

(a) the total occupancy by clients and staff shall be specified in the conditions of a development permit;

(b) the Development Authority may establish the maximum number of residents allowed in a group home facility on a case-specific basis with attention given to the land use definition, the land use district in which the use is located and the type of facility seeking approval;

(c) no exterior alterations shall be undertaken to a dwelling or former dwelling which would be inconsistent with the residential character of the building;

(d) the use of accessory buildings, structures or uses not associated with the principal residential dwelling are not permitted on the property;

(e) site lighting must be designed not to “flood or spill” into adjacent property;

(f) the site must allow for secure storage and pick up of garbage and recycling material located away from public areas;

(g) the use shall not generate traffic problems within the district;

(h) on-site parking is required with the provision of two spaces per each dwelling unit plus one space per employee;

(i) signage for group homes must comply with the following:

(i) a maximum of one sign,

(ii) sign must be no greater than 0.74 m^2 (8 ft^2) in size, and

(iii) sign must be located in the window;

(j) all applications for group homes shall, as a condition of approval, obtain the necessary approvals required from regulatory agencies and the group home shall comply with provincial standards.

SECTION 19 HERITAGE CONSERVATION/HISTORICAL SITES AND VARIANCE PROVISIONS

19.1 The Development Authority may relax or vary a standard of the bylaw pertaining to site coverage, setbacks, height restrictions, access, parking and loading requirements, lot dimensions and sizes, if it is to accommodate the preservation or redevelopment of a building or development that has been officially designated as a historic building or site or meets the criteria in 20.2 below.

19.2 Sites or buildings considered as eligible to receive special consideration under the Land Use Bylaw include; archaeological sites, cultural landscapes, ethnic and local heritage sites, pioneer and agricultural sites, schools, churches and community halls, historic commercial buildings or structures, transportation heritage and cemeteries, and which may have been identified in the *Majorville Guidelines for Land & Resource Management*, *Vulcan County Heritage Survey & Inventory* or other document.

19.3 The Development Authority may waive certain requirements of the standards of the Land Use Bylaw subject to the following conditions:

(a) the proposed work on the site would be compatible with and sympathetic to the character and context of the heritage site according to the *Standards and Guidelines for the Conservation of Historic Places in Canada* document and/or the *Vulcan County Heritage Management Plan*;

(b) the heritage character-defining elements of the site are maintained;

(c) the existing buildings or use would be compromised if strict adherence to the Land Use Bylaw standards were enforced;

(d) legal protection, in the form of a heritage designation or a covenant, may be a pre-requisite for any municipal heritage incentive.

19.4 Where Council has, after giving the owner 60 days' notice, designated by bylaw a historic resource within the municipality whose preservation it considers to be in the public interest, together with any land in or on which it is located that may be specified in the bylaw as a "Municipal Historic Resource," no person shall alter or destroy or repair the resource without the approval of Council or a person appointed by Council.

SECTION 20 HOME OCCUPATIONS

20.1 An application for a development permit shall include:

(a) proof of ownership and residency;

(b) description of business;

(c) materials, equipment and/or vehicles that will be used for the Home Occupation;

(d) number of resident and non-resident employees;

(e) number of business visits per day;

(f) number of parking spaces on the property; and

(g) type of signage for the Home Occupation.

20.2 An approved home occupation shall be valid only for the period of time the property is occupied by the applicant or owner for the approved use and the permit approval is non-transferable to another location or owner.

20.3 No permit shall be issued if, in the opinion of the Development Authority, the home occupation would undermine the liveability standards of the residential use of the property or any adjacent properties.

20.4 No permit shall be issued if the parcel does not have a habitable residence, power, on-site potable water supply, a sewage disposal system, and legal and physical access to a municipal road.

20.5 No advertising shall be permitted on the property except for one indirectly illuminated sign of 3.0 m^2 (32 ft^2) placed flat against the building or fence. Larger signage may be permitted if, in the opinion of the Development Authority, the signage does not interfere with the residential or agricultural character of the area.

20.6 Home occupations may be approved subject to the following criteria and conditions:

(a) Goods may be stored subject to the approval, and any screening requirements imposed by, the Development Authority, provided the storage of such shall not create an appreciable change in the appearance of the residence or its accessory buildings.

(b) A home occupation use is considered the secondary use of a residence or ancillary building to a residence. Any use which the Development Authority deems to exceed the scale or intensity appropriate for a home occupation shall be directed to locate within an appropriate non-residential land use district. Home occupations that have grown to exceed the reasonable threshold determined by the Development Authority shall be required to relocate to an appropriate non-residential land use district.

(c) Consideration shall be given to the potential for a home occupation to impact adjacent uses due to noise, vibration, smoke dust or odours. No offensive noise, vibration, smoke, dust, odours, heat, or glare should be produced by the use.

(d) The Development Authority may place planning related conditions on a home occupation development permit that limit the number of employees, average number of daily business related trips, commercial vehicles and/or trailers, business hours, outside storage or any other measurable impact in order to ensure the home occupation is compatible with adjacent land uses and the prevailing character of the area.

20.7 Based on the information provided in the application, the Development Officer shall determine what level of Home Occupation Permit will be required for operation using the chart below. However, the Development Authority may choose to classify a proposed home occupation at a different class level notwithstanding whether it falls within or exceeds a threshold established below. The Development Authority and may stipulate a lesser threshold.

	Home Occupation 1 Example: home office	**Home Occupation 2** Example: service oriented	**Home Occupation 3** Example: contractor
Non-Resident Employees	None	Up to 2	Up to 5
Commercial Vehicles and Trailers	Up to 2	Up to 2	Up to 5
Outside Storage	None	At Development Authority's discretion	At Development Authority's discretion
Parking Stalls	None	One per employee plus one for customers	One per employee plus one for customers

SECTION 21 KENNELS

21.1 An application for a development permit must be made to the Development Officer by submitting:

(a) a site plan indicating the legal description, all property lines and easements, and the location of existing and proposed development in relation to lot boundaries;

(b) building elevations and sections at a minimum scale of 1:200 or such other scale as required by the Development Officer;

(c) floor plans illustrating the number, size and location of animal pens inside and outside the building at a minimum scale of 1:200 or such other scale as required by the Development Officer;

(d) for breeding kennels, a business plan with information on the number of dogs, type of facility proposed, how waste (feces) will be managed, the type (breed), ratio of females to males and anticipated puppy litters; and

(e) for breeding kennels and non-breeding animal care services, a detailed description of how the facility will meet the Canadian Veterinary Medical Association Code of Practice for Canadian Kennel Operations – Edition May 2007, and any subsequent editions or amendments thereto.

21.2 No buildings or exterior exercise area(s) to be used to accommodate dogs shall be allowed within 304.8 m (1,000 ft) of any dwelling located on adjacent parcels and a diagram indicating the distances shall be submitted with the development permit application. A reciprocal setback from existing breeding kennels and animal care service facilities used for overnight boarding shall be applied to all new dwellings.

21.3 All dog facilities, including buildings and exterior exercise areas, shall be located to the rear of the principal building and shall be constructed to the following standards:

(a) interior walls and ceilings shall be constructed of washable building material;

(b) exterior walls should be fire-resistant and impervious to moisture;

(c) doors, window frames and window sashes should be impervious to moisture and rodent resistant;

(d) insulation shall be required, taking into consideration the breed, age and overall health of the dogs; and

(e) all facilities must have adequate ventilation and light.

21.4 The Development Authority may, when issuing a development permit, determine the maximum number of adult dogs that may be kept at any one time by the operator of an animal care service or a breeding kennel, provided the number of dogs does not exceed the number established in the use definition of a breeding kennel (which shall not be waived).

21.5 All pens, rooms, exercise runs, and holding stalls shall be soundproofed if deemed necessary by the Development Authority which shall base its decision on the number of animals to be kept at the animal care service or breeding kennel, the proximity of the use to other uses and/or other kennels, and possibility that the noise from the use may adversely affect the amenities of the area.

21.6 In addition to soundproofing requirements, the times at which the animals are allowed outdoors may be regulated. In particular, all dogs at an animal care service or breeding kennel, including pups, may be required to be kept indoors between the hours of 11:00 p.m. and 7:00 a.m.

21.7 All breeding kennel facilities shall be screened by both a visual and sound barrier, by fences and/or landscaping, from existing dwellings on adjacent parcels to the satisfaction of the Development Authority.

21.8 Breeding kennels and animal care facilities shall be operated in accordance with health regulations and, in particular, excrement and similar waste shall be disposed of in a manner acceptable to Alberta Health Services.

21.9 Permits issued for an animal care service or breeding kennel development may be limited to a maximum period of three years and shall be subject to immediate revocation if the use is not developed or operated in accordance with the conditions of approval.

21.10 Application for a development permit for a new or existing animal care service or breeding kennel operation shall take into consideration the following (where applicable):

(a) mandatory inspection report by a Doctor of Veterinary Medicine submitted with application;

(b) any previous complaints or comments from adjacent landowners;

(c) complaints filed to the Alberta Society for the Prevention of Cruelty to Animals (SPCA);

(d) compliance with the Canadian Veterinary Medical Association Code of Practice for Canadian Kennel Operations –- Edition May 2007.

21.11 As a condition of approval, the Development Authority shall require that the applicant submit an inspection report, prepared by a Doctor of Veterinary Medicine, to Vulcan County on the anniversary date of the permit. In addition, at the discretion of the Development Authority, the applicant may be required to submit yearly inspection reports as a condition of approval.

NOTE TO READER: *The keeping of dogs and other animals shall be done so in accordance with the Vulcan County Animal Control Bylaw.*

SECTION 22 LANDS AFFECTED BY THE MAJORVILLE GUIDELINES FOR LAND AND RESOURCE MANAGEMENT

22.1 Subdivision and development proposals for the limited private lands within the boundaries of the *Majorville Guidelines for Land and Resource Management* will be required to demonstrate consistency with the objective of maintaining the integrity of the Majorville Heritage Landscape and Historical Resource Management Area.

SECTION 23 LANDS AFFECTED BY THE WYNDHAM-CARSELAND AREA STRUCTURE PLAN

23.1 Subdivision and development proposals within the boundaries of the *Wyndham-Carseland Area Structure Plan* will be required to submit technical data to demonstrate that the proposed parcels or permanent structures are suitable for their proposed use in accordance with the provisions of the area structure plan, the relevant provisions of this Bylaw (specifically Schedule 4, Sections 3 to 5) and current best practises.

SECTION 24 LANDS AFFECTED BY THE RESERVOIR AREA STRUCTURE PLAN

24.1 Subdivision and development proposals within the boundaries of the *Reservoir Area Structure Plan* will be required to submit a conceptual scheme where required in accordance with the provisions of the document.

SECTION 25 LANDSCAPING STANDARDS AND GUIDELINES

25.1 The Development Authority may impose landscaping or screening requirements on development applications for any permitted or discretionary use. The intent of landscaping and screening is as follows:

(a) to provide screening of outdoor storage of goods, machinery, vehicles, buildings, or waste materials, in order to mitigate the visual impact of the development and/or to provide visual relief/interest; and

(b) to provide a reasonable standard of appearance for developments while contributing to a positive overall image for the County.

25.2 Where any parcel or part of a parcel adjacent to a provincial highway is used for outdoor storage of goods, machinery, vehicles, buildings, or waste materials, the Development Authority shall require screening through the use of fences, hedges, trees, berming, or other landscaping features in order to mitigate the visual impact of the development and/or to provide visual relief/interest.

25.3 The Development Authority may require that a high-quality landscape plan be submitted for approval:

(a) as part of a development permit application prior to it being deemed complete; or

(b) as a condition of a development permit approval.

25.4 When a landscaping plan is required by the Development Authority, it shall include the following information:

(a) boundaries and dimensions of the subject site;

(b) location of all buildings, parking areas, driveways, pathways, and all other physical features;

(c) the existing topography;

(d) location and type of all existing plant materials to be retained;

(e) location and type of all new plant materials;

(f) plant material list identifying the name, quantity and size of plant materials;

(g) the layout and type of soft and hard landscaped areas;

(h) details of the method of irrigation; and

(i) maintenance procedure to ensure vegetation survival.

25.5 Landscaping may consist of any or all of the following:

(a) trees, shrubs, lawn, flowers;

(b) large feature rocks, bark chips, field stone (limit of 25 percent of total landscaped area);

(c) berming, terracing;

(d) other innovative landscaping features.

25.6 Additional landscaping that may be required at the discretion of the Development Authority may include, but is not limited to the following:

(a) strips of soft vegetation, or buffering, between adjacent land uses;

(b) the use of trees, shrubs, fences, walls, and berms to buffer or screen land uses;

(c) the use of trees, shrubs, planting beds, street furniture and surface treatments to enhance the appearance of a proposed development.

25.7 Within hamlets and the Grouped Reservoir Residential district, the front yard shall be comprehensively landscaped. The landscaping of lots shall be carried out within two years of the date a development permit is issued, to the satisfaction of the Development Authority.

25.8 All landscaping that is required and approved as part of a development permit is a permanent obligation of the development permit and shall be maintained for the life of the development in accordance with accepted horticultural practises.

25.9 The Development Authority may require, as a condition of development permit, guaranteed security to ensure that landscaping is provided and maintained for a period of one year.

SECTION 26 MANUFACTURED / MODULAR / READY-TO-MOVE / MOVED-IN DWELLING STANDARDS

Eligible Dwellings

26.1 **Manufactured Dwelling 1:**

(a) new factory-built units within the past year of application for a permit;

(b) not previously occupied; and

(c) constructed to current Canadian Standards Association (CSA) certified units.

26.2 **Manufactured Dwelling 2:**

(a) used factory-built units, not constructed prior to 1985 and in a good state of repair (to the satisfaction of the Development Authority); and

(b) constructed to the Canadian Standards Association (CSA) or other applicable standard of the day.

26.3 **Modular Dwelling 1:**

(a) new units built within the past year of application for a permit and not previously occupied;

(b) current Canadian Standards Association (CSA) certified units;

(c) the minimum roof pitch shall not be less than a 4/12 pitch;

(d) the minimum floor area of the principal dwelling not including attached garage shall not be less than 74.3 m^2 (800 ft^2);

(e) the dwelling shall be a minimum 7.3 m (24 ft) in width;

(f) must be placed on a contiguous concrete foundation.

26.4 **Modular Dwelling 2:**

(a) a new unit placed on a permanent foundation other than a basement;

(b) a previously occupied unit placed on a permanent foundation with a basement.

26.5 **Ready-to-move dwellings:**

(a) new units built within the past year of application for a permit; and

(b) not previously occupied.

26.6 **Moved-in dwellings:**

(a) previously occupied dwellings.

Application Requirements for Previously Occupied Dwellings

26.7 Any application for a development permit to locate a previously occupied dwelling (of any type):

(a) shall include recent colour photographs of all elevations including additions and decks;

(b) a professional dwelling inspection;

(c) accurate site plan for the location to which the building is to be placed or moved;

(d) floor plan;

(e) application fee as established by Council, and

(f) must be CSA certified units (if applicable).

Foundations, Basements, and Roof Lines

26.8 Units shall be placed on foundations which conform to provincial building code requirements.

26.9 All dwellings not placed on a basement shall be skirted in accordance with provincial building code requirements and to the satisfaction of the Development Authority.

26.10 Any portion of a concrete block foundation above grade shall be parged or finished with another approved material.

26.11 The maximum height of the exposed portion of a concrete block foundation shall be not more than 0.9 m (3 ft) above the average finished grade level of the surrounding ground.

26.12 The Development Authority may require that a dwelling within the a Grouped Country Residential, Grouped Reservoir Residential, or Hamlet land use district, be placed on a continuous concrete foundation in order to improve the compatibility of the development with adjacent land uses.

Additions

26.13 Addition requirements:

(a) any additions, such as enclosed patios, entrance porches, carports, additional rooms, or any other roofed structure, shall require a development permit;

(b) all dwelling additions shall be of a design and finish which will complement the unit;

(c) the materials and colours used in the construction of additions shall be of a quality, style and design which will match or complement the dwelling;

(d) materials used shall be those commonly used for exterior finishing of residences.

Development Permit Conditions

26.14 As a condition of approval the Development Authority, at its discretion, may place other conditions on a development permit including the requirement that the developer provide landscaping, fencing, address drainage issues, or other such matters it considers necessary if, in its opinion, they would serve to improve the quality or compatibility of any proposed development.

26.15 The Development Authority may require a security deposit of a minimum $1000.00 to a maximum value of up to 50 percent of the assessed value of the building to ensure the conditions of the development permit are met.

26.16 In deciding on an application, including establishing any conditions of approval, the Development Authority shall have regard to the potential impact on existing and proposed uses in the vicinity of the proposed site.

26.17 Any impacts to the dwelling arising from transportation to its final destination shall be disclosed and rectified to the satisfaction of the Development Authority.

26.18 Occupancy of the dwelling is not allowed until all requirements of the *Safety Codes Act* regarding the provision of potable water and sanitary sewage disposal are complied with.

SECTION 27 MOTOR SPORTS PARK

27.1 Setbacks for outdoor motor sports parks are 2.4 km (1.5 miles) from schools, residences, campgrounds, hospitals, parks, playgrounds, churches and other institutions, recreational trails and known habitat of rare, threatened or endangered animal species, migratory bird sanctuaries, protected natural areas designated under legislation, regionally significant areas, deer wintering areas and confined feeding operations.

27.2 In deciding on an application, including establishing any conditions of approval, the Development Authority shall have regard to the potential impact on existing and proposed uses in the vicinity of the proposed site.

27.3 The Development Authority shall consider the site, natural features, and the quality of the land on which the development is proposed as such uses shall be discouraged on good quality agricultural land and in environmentally sensitive or significant areas.

SECTION 28 NATURAL RESOURCE EXTRACTIVE USES

28.1 Both Class 1 (5 ha or greater) and Class 2 pits (less than 5 ha) as defined in the provincial *Code of Practice for Pits* shall require a development permit approved by the municipality to operate.

28.2 A sand, clay and gravel pit or a stone quarry may be considered for approval provided that:

(a) if it **is less than 5 ha (12.5 acres)** in size, a reclamation plan must be provided to the satisfaction of the municipality; or

(b) if it **is 5 ha (12.5 acres) or greater**, a reclamation plan must be filed with Alberta Environment and Parks that complies with its regulations and the recommendations of its Land Reclamation division, and a copy provided to the municipality.

28.3 The following shall be submitted with a development permit application for surface mineral excavation:

(a) operation plans;

(b) details of roads, access points and traffic volumes;

(c) surface access agreement with the landowner;

(d) location and phasing of vegetation clearance and stripping of topsoil;

(e) identification of areas to be left undisturbed;

(f) weed control; and

(g) reclamation process phasing and security payments.

28.4 Topsoil must be stockpiled and used to reclaim the worked-out site.

28.5 A natural resource extractive use shall not be developed at a location which, in the opinion of the Development Authority, would lead to land use conflicts with adjoining or nearby uses.

28.6 The working area (defined as the area used for excavation, stockpiling and crushing) of a sand, clay and gravel pit or a stone quarry operation shall not be located closer than 1.6 km (1 mile) to a residential dwelling, the separation distance being measured from the edge of the dwelling to the nearest edge of the planned working area of the sand and gravel extraction operation.

28.7 Sand and gravel extraction may be permitted within 1.6 km (1 mile) of an individual residence where provision is made regarding site-specific mitigation of noise, dust, visual, traffic, lighting and other effects of the sand and gravel operation and must be agreed to by the resident in writing.

28.8 The Development Authority may require that a natural resource extractive use and any storage or disposal of a natural resource or any finished or semi-finished materials or waste, be located not less than 100 m (328 ft) from the bed and shore of a permanent or intermittent water body.

28.9 The Development Authority shall consider the effects of visual intrusion, dust, noise, traffic, and air and water pollution when evaluating applications for these types of development permits.

28.10 The Development Authority may require that the Developer enter into a Road Use Agreement with Vulcan County in order control traffic on county roads and manage dust control and/or maintenance issues.

28.11 The Development Authority may place conditions on an approved development permit that include, but are not limited to, regulating days and hours of operation, imposing setbacks, control or mitigate dust and noise, require berming or screening, monitoring ambient air quality, and the phasing of a project.

28.12 The development permit shall generally be limited to a phase of an operation and/or a term not exceeding three years.

28.13 The Development Authority may refuse to approve an application for a private sand, clay and gravel pit or a stone quarry in or adjacent to a river valley, shoreland area or flood prone area if it is of the opinion that the area is unsuitable.

28.14 The Development Authority shall take into consideration the *Environmentally Significant Areas in the Oldman River Region* document in making a decision on an application for a resource extraction use and may deem a development application to be unsuitable in accordance with that report, or may request additional information be provided by the applicant to ensure any matters outlined in Section 7 Environmentally Significant Areas (ESAs) of Schedule 4 are addressed to the satisfaction of the Development Authority.

SECTION 29 OFF-STREET PARKING AND LOADING AREA REQUIREMENTS FOR NON-AGRICULTURAL USES

Applicability

29.1 The off-street parking and loading requirements and design standards apply to:

(a) all new buildings and uses; and

(b) the expansion or enlargement of existing buildings or uses.

29.2 In the case of expansion or enlargement of an existing building or use, additional off-street parking spaces will be required to serve the expanded or enlarged area only, not the entire building or use.

Minimum Required Off-Street Parking

29.3 Table 1, Minimum Required Off-Street Parking, shall be used to calculate the minimum number of off-street parking spaces a use is required to provide.

29.4 Off-street parking requirements based on floor area are to be computed on the gross floor area (GFA) of the building.

29.5 Calculation of off-street parking requirements resulting in a fractional number of 0.5 or greater shall be rounded up and rounded down when resulting in a fractional number of 0.49 or less.

29.6 A multiple use development must provide parking in an amount equal to the number of spaces for all uses, except where a shared parking provision is approved by the Development Authority. A shared parking provision based upon the proposed sharing of parking spaces between two or more uses must include a written agreement between the owners on record. Where shared parking is approved, a caveat shall be registered against the lot to guarantee the continuous use of the site for parking.

29.7 Where a use is not listed, minimum required off-street parking shall be provided as required by the Development Authority having regard to the listed use that is most similar to the proposed use. As an alternative, the Development Authority may require a parking study to be prepared by a qualified professional at the applicant's expense to determine the parking requirements for a use not listed in Table 1.

29.8 All required parking spaces shall be provided on the same lot as the building or use, except where the Development Authority may permit off-site parking spaces to be provided on a lot within 152.4 m (500 ft) of the building or use if, in the Development Authority's opinion, it is impractical to provide parking on the same lot as the building or use. Where such off-site parking is approved, a caveat shall be registered against the lot to guarantee the continuous use of the site for parking.

Barrier-free Parking

29.9 The minimum number of barrier-free parking spaces to be provided for the disabled shall be a portion of the total number of off-street parking spaces required, in accordance with Table 2, Barrier-Free Parking Spaces. Where a use has not been addressed in Table 2, parking requirements shall be at the discretion of the Development Authority.

29.10 Each barrier-free parking space for the disabled shall be:

(a) at least 3.7 m (12 ft) wide;

(b) have a firm, slip-resistant and level surface;

(c) be clearly marked as being for the use of persons with disabilities only.

29.11 Where there are two or more adjacent barrier-free parking stalls, a 1.5 m (5 ft) wide access aisle shall be provided between the stalls.

29.12 Barrier-free parking stalls shall be clearly identifiable in accordance with Alberta Safety Codes requirements.

29.13 There must be a well-lit, distinguishable, barrier-free path of travel from the parking areas to the building entrance.

29.14 It is recommended that an additional number of spaces be considered when the purpose or use of the building facilities may cause an increase in the number of seniors or persons with disabilities who require accessible parking, such as, but not limited to, medical services and restaurants.

Table 1 – Minimum Required Off-street Parking

USE	MINIMUM PARKING SPACES
COMMERCIAL/INDUSTRIAL	
Animal care service	1 space / 46.5 m^2 (500 ft^2) of GFA
Auction market	1 space / 65 m^2 (700 ft^2) of GFA
Auto repair and paint shop	1 space / 46.5 m^2 (500 ft^2) of GFA
Auto sales and service	1 space / 46.5 m^2 (500 ft^2) of GFA
Bulk fuel storage and sales	1 space / 46.5 m^2 (500 ft^2) of GFA
Business support service	1 space / 46.5 m^2 (500 ft^2) of GFA
Car wash	1 space per employee
Campground (Visitor Parking)	1 space per 10 camping stalls
Drive-in/drive-through use	1 space / 5.1 m^2 (55 ft^2) of seating area plus 1 space per employee
Entertainment establishment	1 space / 5.1 m^2 (55 ft^2) of patron use area plus 1 space per employee
Equipment sales, rental and service	1 space / 65 m^2 (700 ft^2) of GFA
Grain elevators/seed cleaning	1 space per employee
Hotel/motel	1 space per guest room
Industrial, heavy	1 space / 92.9 m^2 (1000 ft^2) of GFA
Industrial, light	1 space / 65 m^2 (700 ft^2) of GFA
Intensive horticultural service	1 space / 65 m^2 (700 ft^2) of GFA
Kennel or animal care service	1 space / 65 m^2 (700 ft^2) of GFA
Landscaping materials sales	1 space / 65 m^2 (700 ft^2) of GFA
Mini storage	As required by the Development Authority
Office	1 space / 46.5 m^2 (500 ft^2) of GFA
Outdoor storage	As required by the Development Authority
Personal service business	1 space / 37.2 m^2 (400 ft^2) of GFA
Recreation facility	1 space / 27.9 m^2 (300 ft^2) of GFA
Recycling facility	1 space / 65 m2 (700 ft2) of GFA
Restaurant	1 space per 4 seats plus employee parking

Table 1 – Minimum Required Off-street Parking (continued)	
USE	**MINIMUM PARKING SPACES**
Retail store	1 space / 27.9 m^2 (300 ft^2) of GFA
Service and gas stations	1 space / 37.2 m2 (400 ft2) of GFA
Short-Term Rental	1 space off-street (up to two guest rooms) 2 spaces off-street (more than two guest rooms)
Truck transportation/dispatch depot	1 space / 65 m2 (700 ft2) of GFA
Truck wash	1 space per employee
Warehousing	1 space / 65 m^2 (700 ft^2) of GFA
RESIDENTIAL	
Bed and breakfast	1 space per guest room
Child care facility	1 pick-up/drop-off space per 10 children plus 1 space per employee
Dwellings:	
- Duplex	2 spaces per dwelling unit
- Multi-unit	2 spaces per dwelling unit plus 0.5 space per unit for visitor parking
- Single-detached, Modular 1 or 2 Manufactured 1 or 2	2 spaces per dwelling unit
Group home	1 space per employee
Home occupation 2 & 3	As required by the Development Authority
Senior citizen housing	1 space per 2.5 dwelling units
PUBLIC	
Clubs and organizations	1 space / 9.3 m^2 (100 ft^2) of gross floor area plus 1 space per employee
Community hall	1 space / 5 seating spaces plus 1 space per employee
Exhibition centre	As required by the Development Authority
Hospital	1 space per bed
Religious assembly	As required by the Development Authority
School	As required by the Development Authority

Table 2 – Barrier-Free Parking Spaces	
Number of parking spaces required for a use	Number of barrier-free spaces required for use by persons with disabilities
0-10 11-25 26-50 51-100 for each additional increment of 100 or part thereof	0* 1 2 3 one additional stall

*Developer is encouraged to provide at least one barrier-free parking space for use by persons with disabilities.

Loading Space Requirements

29.15 One loading space shall be provided for each loading door.

29.16 The minimum dimensions for a loading space shall be 3.1 m (10 ft) by 9.1 m (30 ft) with an overhead clearance of 4 m (13 ft).

29.17 Each loading area shall provide a doorway into the building sufficient to meet the needs of the use within the building.

29.18 Each loading area shall be designed in such a manner that it will not interfere with convenient and safe pedestrian movement, traffic flow or parking.

29.19 The Development Authority may require additional loading areas or doors if such additional areas or doors are deemed necessary.

Stacking Spaces for Drive-through Uses

29.20 In addition to the off-street parking requirements, a drive-through use is required to provide the following minimum stacking spaces:

All uses with a pick-up window:	30.5 m (100 ft) from order box to pick-up window
Gas station:	9.1 m (30 ft) from each end on pump island
Car wash:	15.2 m (50 ft) from car wash entrance

29.21 The minimum stacking space requirements may be varied by the Development Authority depending upon the intensity of the proposed development.

Off-street Parking Design Standards

29.22 Off-street parking areas shall be accessible and designed in a manner which will provide for orderly parking in accordance with the minimum parking space dimensions in Table 3, Minimum Parking Space Dimensions.

29.23 Parking space designs proposing tandem or stacked parking to a maximum of two vehicles per stall may be approved by the Development Authority provided the spaces are for employee parking only.

29.24 The stall width and depth requirements for an off-street parking space may be reduced by the Development Authority where spaces are designed to accommodate limited compact vehicle parking.

29.25 Where a use or development may need to accommodate over-sized vehicles such as tractor-trailers, large recreational vehicles, buses or other similar vehicles, the Development Authority may require larger parking space and aisle dimensions.

29.26 Off-street parking areas shall be constructed in a manner which will permit adequate drainage, snow removal, and maintenance.

29.27 Off-street parking spaces adjacent to a road right-of-way shall be provided with bumper blocks, curbing or other similar protective feature to ensure public safety and prevent vehicle overhang.

29.28 The Development Authority may require that off-street parking areas or portions thereof be paved as a condition of approval.

Table 3 – Minimum Parking Space Dimensions						
A: Parking Angle	**B: Stall Width**		**C: Stall Depth**		**D: Aisle Width**	
Degrees	Metres	Feet	Metres	Feet	Metres	Feet
0	2.4	8.0	6.7	22	3.7	12
30	2.7	9.0	5.5	18	3.5	11
45	2.6	8.5	6.1	20	3.9	13
60	2.6	8.5	6.4	21	5.5	18
90	2.9	9.5	5.6	18.5	7.3	24

Figure 1: Minimum Parking Space Dimensions

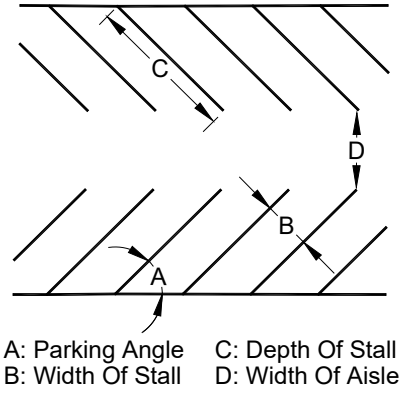

SECTION 30 RECREATIONAL VEHICLE (RV) STORAGE

30.1 The maximum number of recreational vehicle units permitted on the site shall be as determined by the Development Authority. Generally, there should not be permitted more than 60 units per acre of land.

30.2 Recreational vehicle storage shall be carried out in accordance with the *Alberta Fire Code* pertaining to water for fire suppression, fencing and access.

30.3 Vehicle entrances and exits, as well as internal vehicle routes shall be designed in a manner that provides a safe and clearly defined circulation pattern.

30.4 All on-site roadways shall have a durable hard surface of gravel or similar material and the same shall be drained and developed to the satisfaction of the Development Authority.

30.5 Where on-site parking or storage is illuminated, all lighting shall be positioned and shielded in such a manner that lighting falling onto abutting properties is minimized.

30.6 Any developed portion of the site must be graded, contoured and seeded and shall provide for a satisfactory disposal of surface water by grading and drainage in such a manner that no surface water shall drain onto public roadway or other neighbouring property.

30.7 There shall be no storage of hazardous materials or goods on-site.

30.8 No day use or over-night accommodation shall be allowed on-site.

30.9 A recreational vehicle parked on a lot in any district shall not be used for permanent living or sleeping accommodation.

30.10 The storage of recreational vehicles shall not include storage for the salvage of, or for derelict recreational vehicles.

30.11 The recreational vehicle compound may be fenced with a minimum 1.8 m (6 ft) high chain link fence around the periphery of the storage area, or as otherwise required by the Development Authority.

30.12 Any proposed sanitation dump shall be in accordance with the Alberta Safety Code Standard of Practice.

30.13 A landscaping plan may be required as part of the submission for a development permit.

SECTION 31 RENEWABLE ENERGY, INDIVIDUAL

Solar Collector

This section establishes standards of development for individual solar collector systems, either single panels or multiple panels, for use by households, agricultural operators or individual business or industry intended to meet some or all of the electrical needs of the operator on the subject site, or a site immediately adjacent to the subject site.

31.1 No development permit is required for installation of a renewable energy system, individual of less than or equal to 1.5 KW on a parcel in any land use district specified in accordance with Schedule 3 - Development Not Requiring a Development Permit.

31.2 Development permit applications for a solar collector system shall be accompanied by the following additional information:

(a) documentation demonstrating the system is designed to produce energy primarily for sole use and consumption on-site by the landowner, resident or occupant;

(b) manufacturer's specifications for system design and rated output;

(c) a site plan showing the location and orientation of the solar collectors;

(d) for panels mounted to the roof of a building or accessory structure or affixed to the wall of a building or accessory structure, a description of how the panels are to be mounted or affixed, maximum projection from roof or wall, and structural capacity of the building/wall to support the proposed development;

(e) for free-standing solar panels, a description of the proposed ground mount design including clearance to the bottom of the collectors and maximum height from existing grade;

(f) wire service provider (WSP) approval for solar collectors that are proposed to be connected to the provincial power grid.

31.3 Solar panel installations may be affixed to a building wall (principal and/or accessory), mounted to the roof of a building (principal and/or accessory) or mounted to the ground as a free-standing structure.

31.4 Solar panels must be located such that they do not create undue glare on neighbouring parcels or public roadways.

31.5 Solar panels mounted to the roof of a principal building or accessory building or structure must not extend beyond the outermost edge of the roof.

31.6 The maximum projection of solar panels affixed to the wall or mounted to the roof or wall of a principal building or accessory building or structure shall be 1.22 m (4 ft), subject to the maximum height and minimum setbacks requirements of the applicable land use district.

31.7 The minimum clearance for solar panels affixed to the wall of a principal building or accessory building or structure shall be 2.44 m (8 ft) from grade.

31.8 The maximum height of a free-standing solar panels shall not exceed 4.6 m (15 ft).

31.9 The location of, and maximum number of solar collectors per parcel, may be regulated by the Development Authority.

Small Wind Energy Conversion Systems

This section establishes standards of development for small wind energy conversion systems for use by households, agricultural operators or individual business or industry intended to meet some or all of the electrical needs of the operator on the subject site, or a site immediately adjacent to the subject site.

31.10 Applications for Small Wind Energy Systems shall include the following information where applicable:

(a) the manufacturer's specifications indicating:
  (i) the SWES rated output in kilowatts;
  (ii) safety features and sound characteristics;
  (iii) type of material used in tower, blade, and/or rotor construction;

(b) potential for electromagnetic interference;

(c) nature and function of over speed controls which are provided;

(d) specifications on the foundations and/or anchor design, including location and anchoring of any guy wires;

(e) location of existing buildings or improvements.

31.11 Prior to making a decision on a development application for a Small Wind Energy System, the Development Authority may refer and consider the input of the following agencies and departments:

(a) Alberta Utilities Commission,

(b) Transport Canada,

(c) Navigation Canada.

31.12 Small Wind Energy Systems shall comply with the following standards:

(a) There shall be a limit of one small wind energy system per parcel.

(b) The system's tower shall be set back a minimum distance equal to the height of the tower from all parcel lines, or the minimum setback in the applicable land use district, whichever is the greater.

(c) No part of the system, including guy wire anchors, may extend closer than 3.0 m (10 ft) to the property boundaries of the installation site.

(d) The system's tower shall not exceed a maximum height of 12.1 m (40 ft) on a parcel of less than 0.4 ha (1 acre), a maximum of 19.8 m (65 ft) on a parcel of 0.4 ha (1 acre) to less than 2.0 ha (5 acres), and maximum height of 24.4 m (80 ft) on a parcel 2.0 ha (5 acres) or more.

(e) The Development Authority may require that the system's tower be located and screened by landforms, natural vegetation or other means to minimize visual impacts on neighbouring residences and public roads, public trails and other public areas.

(f) The system's tower and supporting structures shall be painted a single, neutral, non-reflective, non-glossy (for example, earth-tones, gray, black) that, to the extent possible, visually blends the system with the surrounding natural and built environments.

(g) The system shall be equipped with manual and automatic over speed controls. The conformance of rotor and over speed control design and fabrication to good engineering practices shall be certified by a licensed mechanical, structural or civil engineer.

(h) The system's tower-climbing apparatus and blade tips shall be no closer than 4.6 m (15 ft) from ground level unless the system is enclosed by a 1.8 m (6 ft) high fence.

(i) The system's utility lines shall be underground where economically practical.

(j) The system shall be operated such that no electro-magnetic interference is caused.

(k) The system's maximum power shall not exceed 3 kW.

(l) Small wind turbines shall not exceed 60 dB(A), or in excess of 5 dB(A) above the background noise, whichever is greater. The level, however, may be exceeded during short-term events including utility outages and severe windstorms.

(m) Brand names or advertising associated with the system or the system's installation shall not be visible from any public place.

(n) Upon abandonment or termination of the system's use, the entire facility, including the system's tower, turbine, supporting structures and all equipment, shall be removed and the site shall be restored to its pre-construction condition.

SECTION 32 RENEWABLE ENERGY, COMMERCIAL/INDUSTRIAL

This section establishes standards for the development of renewable energy projects for the purpose of producing energy for the commercial market. Typically, this use will include commercial systems for the production and sale of energy generated by the following, but not limited, to solar photovoltaic, solar thermal, geo-exchange, wind, micro-hydro, carbon capture and storage, bio fuel or fuel cell.

NOTE TO READER: *The Alberta Utilities Commission (AUC) regulates large scale/commercial energy projects. The County's regulatory role is limited, and established under sections 619 and 620 of the MGA. Where AUC approval has been applied for or received, a copy of the application submitted to the AUC may be used to satisfy some or all of the development permit application requirements.*

32.1 Prior to making a decision on a development application for a Renewable Energy, Commercial/Industrial use, the Development Authority should refer and consider the input of any of the following agencies and departments (as the case may be depending on the type of application):

(a) Transport Canada;

(b) NAV Canada;

(c) Alberta Culture and Tourism;

(d) Alberta Environment and Parks;

(e) Alberta Transportation;

(f) Alberta Electric Systems Operator (AESO);

(g) Alberta Utilities Commission (AUC).

Notification & Public Consultation

32.2 Upon receipt of a development permit application for a Renewable Energy, Commercial/Industrial use, the Development Authority shall review the application for completeness and, prior to making a decision on the application:

(a) notify landowners and residents, by mail, within 2 km (1.2 miles) of the proposed development site (or more, at the discretion of the Development Authority);

(b) notify adjacent municipalities in accordance with the applicable Intermunicipal Development Plan;

(c) refer the application to all relevant agencies and government departments; and

(d) the developer shall host a public information meeting, within 60 days prior to submitting a development permit application, which meets the following criteria;

i. notification of the meeting is sent to landowners 21 days prior and is provided to landowners within a 2km radius of the project boundary as well as those landowners who are situated along the proposed construction haul route and;

ii. the County is notified 21 days prior to the meeting and;

iii. an in-depth summary is provided to County administration, that includes but is not limited to, an outline of the impacts and benefits relayed by attendees, and how the proponent intents on addressing the matters and;

iv. the meeting summary is included in the development permit application.

SOLAR COLLECTOR FARMS

32.3 Development permit applications for commercial solar installation shall be accompanied by the following additional information:

(a) a site suitability analysis including but not limited to: topography, soil characteristics, environmental features and issues, accessibility to a road, compatibility with surrounding land uses, potential impacts to agricultural land and irrigation operations, potential visual impacts, storm water management, and consistency with the policies of the Municipal Development Plan and this Bylaw;

(b) information regarding setbacks from public roads, property lines and the proximity to structures or uses on the site and adjacent parcels of land;

(c) detailed information about the system type, number of structures, height of structures, the energy process and rated output, and details on the estimated reflection produced from the solar panels;

(d) preliminary grading/drainage plan, including a site construction/grading plan with details on proposed management practices for any soil stripping and erosion control, and proposed construction haul route;

(e) access to and any potential impacts to public roads;

(f) the location of overhead utilities on or abutting the subject parcel and identification of any sensitive, environmental or topographical features which may be present on the parcel;

(g) a decommissioning plan in accordance with Section 33.6 below;

(h) plans and methods of weed control and erosion mitigation;

(i) information regarding setbacks from structures or uses on the subject site to neighbouring residential dwellings and non-residential developments on adjacent parcels of land;

(j) information regarding general public safety and security measures including site fencing;

(k) a summary of any public consultation undertaken to date;

(l) a statement describing the project's relationship to the *South Saskatchewan Regional Plan*; and

(m) if required by the Development Authority, an Environmental Site Assessment prepared by a qualified professional and/or other studies and reports to demonstrate site suitability and impact mitigation.

Site Suitability & Development Standards

32.4 In the Rural General – "RG" land use district, applicants are encouraged to consider the following when selecting sites:

(a) use of the poor quality lowest productive land, dry corners and poor agricultural land is preferred;

(b) use of cut-off, fragmented, irregular shaped parcels is preferred;

(c) the use of a primarily unsubdivided quarter-section or agricultural parcels 32.4 ha (80 acres) or greater in size of high quality irrigated agricultural land (land with irrigation rights) that has or could contain irrigation system infrastructure should be avoided;

(d) environmentally sensitive and environmentally significant areas, including wetlands or intact native grasslands, should be avoided; and

(e) Solar Collector Farms are not to be located within 300 m (984.3 ft) of an individual residential dwelling on an adjacent parcel, and 750 m (2460.6 ft) from a boundary of a designated grouped country residential, grouped reservoir residential or rural recreational district, hamlet, village or town, as measured from the closest point of the solar collector infrastructure to the adjacent residence, district, hamlet, village or town.

32.5 In addition to the required setbacks and other criteria of the applicable land use district and any other relevant provisions of this Bylaw, a Solar Collector Farm shall adhere to the following developments standards:

(a) all surface drainage must be contained on site and any adjacent water bodies must be adequately protected from run-off;

(b) suitable fencing must be installed to provide security and discourage trespassing;

(c) spacing of solar collectors must provide access for firefighting of both forage and electrical fires;

(d) weed control shall be dealt with in a comprehensive manner ensuring adjacent land owners are not negatively affected; and

(e) solar collectors shall be positioned with a minimum clearance, at the discretion of the Development Authority, so to facilitate the growth of perennial forage to prevent soil erosion.

Decommissioning

32.6 Decommissioning and reclamation shall take place in compliance with the applicable provincial standards of the day the site is decommissioned. If no standards are in place at the time of a development permit application, the applicant shall provide a plan outlining how the site will be decommissioned and reclaimed to the site's predevelopment state. The decommissioning plan shall include information on:

(a) treatment of footings and wires;

(b) reclamation of roads, driveways, pathways, and other similar disturbances;

(c) notice to be given to land owners and the County;

(d) containment of hazardous materials;

(e) site security;

(f) haul routes for disposal materials;

(g) the requirement for solar collector removal after a certain period of inactivity; and

(h) discussion of the timetable for decommissioning plan.

32.7 As a condition of development approval, the County may require security, in a form satisfactory to the Development Authority, to ensure the Reclamation/Decommissioning Plan is implemented and to cover assignment and bankruptcy. The condition may include a periodic review of the security to ensure the amount is sufficient to implement the Reclamation/Decommissioning Plan.

32.8 Should a Solar Collector Farm discontinue producing power for a minimum of two consecutive years, or two cumulative years over a five-year period, the operator shall provide a report on the status of the Solar Collector Farm to the County. A review of the status report by the Municipal Planning Commission may result in a request for the Solar Farm to be decommissioned. Failure to comply with a decommissioning request may result in the issuance of a stop order by the County in accordance with the provisions of the *MGA*.

Conditions of Approval

32.9 As a condition of development permit approval for a Solar Collector Farm, the Development Authority shall consider, in addition to any other conditions authorized under other sections of this Bylaw, attaching conditions related to the following and in accordance with Sections 619 and 620 of the *MGA*:

(a) require the applicant/developer to enter into a road use agreement and/or development agreement with the municipality;

(b) place restrictions on the location, height and type of fencing used for the site;

(c) require the application of approved weed control measures;

(d) require ground cover to be established prior to solar installation to mitigate erosion;

(e) stipulate a collector location spacing and minimum clearance from average ground elevation so to allow perennial forage to grow;

(f) stipulate grading, stockpiling, weed control and soil erosion control measures;

(g) the provision of an emergency/fire suppression management plan;

(h) require compliance with applicable decommissioning and reclamation standards of the day, or if no decommissioning and reclamation standards are in place at the time of application, require compliance with a decommissioning/reclamation plan prepared by the applicant to the satisfaction of the Development Authority;

(i) require that the project commence construction within two years of approval, and complete the project within four years;

(j) require that the operation remain in continuous operation and if the operation is inactive for two consecutive years, or two cumulative years over a five year period, the obligation to decommission the site is automatically triggered; and

(k) the provision of financial security in an amount and type acceptable to the municipality to ensure the decommissioning plan is implemented.

WIND ENERGY CONVERSION SYSTEMS (WECS)

Application Requirements

32.10 For the purposes of a development permit application, WECS will be classified into the following categories:

Category 1 – Total output of WECS proposed is less than 1 megawatt and under 35 m (114.5 ft) in total height.

Category 2 – Total output of WECS proposed is more than 1 megawatt and over 35 m (114.5 ft) in total height.

Exempt – A single WECS under 12.2 m (40 ft) in total height.

All development applications for a WECS, depending upon category, shall be required to be accompanied by the following if determined necessary by the Development Authority:

		Category 1	Category 2
(a)	an accurate site plan showing and labeling the information outlined in this section, and the location of overhead utilities on or abutting the subject lot or parcel;	✓	✓
(b)	a digital version of the site plan showing the exact location and base elevation of each WECS in UTM coordinates with NAD datum, Zone 12;		✓
(c)	a visual representation of the multi-WECS project including scale elevations, photographs and/or digital projections of the project showing total height, rotor diameter, colour and the landscape;		✓

	Category 1	Category 2
(d) the manufacturer's specifications indicating: (i) the WECS rated output in megawatts, (ii) safety features and sound characteristics, (iii) type of material used in tower, blade, and/or rotor construction;	✓	✓
(e) an analysis of the potential for noise and shadow/flicker effect, both at the site of the installation, at the boundary of the property containing the development at any habitable residence within 2 km (1.2 miles) of any WECS – AUC Rule #12;	✓	✓
(f) specifications on the foundations and/or anchor design, including location and anchoring of any guy wires;	✓	✓
(g) the results of any public consultation process;		✓
(h) the status of the applicant's circulation to NavCanada, Transport Canada, Alberta Utilities Commission and any other government departments required for provincial approval;		✓
(i) any information regarding general public safety;	✓	✓
(j) identification of the roads to be used for construction of the project and any impacts to the local road system including required approaches from public roads having regard to Vulcan County standard;		✓
(k) a plan outlining how the site will be decommissioned and reclaimed prior to the development		✓

32.11 An individual development permit application shall be submitted for each titled parcel.

Number of WECS

32.12 Two or more WECS on a parcel, or as part of a project, will be considered a multi-WECS for the purposes of this Bylaw. A single WECS is classified (for use purposes) as a Renewable Energy, Individual.

32.13 The Development Authority may approve multiple WECS on a case-by-case basis having regard for:

(a) proximity to other adjacent land uses;

(b) density of WECS;

(c) consideration of the cumulative effect of all WECS approved or proposed within 5 km (3 miles) of the proposal;

(d) underlying utilities;

(e) information received through the circulation process and at the development hearing.

Setbacks

NOTE TO READER: *The Alberta Utilities Commission (AUC) establishes separation distances between wind turbines and dwellings based on permissible sound levels established in AUC Rule 012 and a cumulative noise assessment of energy-related facilities within 1.5 km.*

32.14 A WECS shall be setback not less than 7.6 m (25 ft) from all property lines not fronting on or adjacent to a municipal roadway as measured from the rotor's arc (rotor diameter).

32.15 A WECS shall be setback from a dwelling unit within the wind farm project boundary (lands leased for wind energy development) not less than 300 m or as meets AUC Rule 012 permitted levels, whichever is greater.

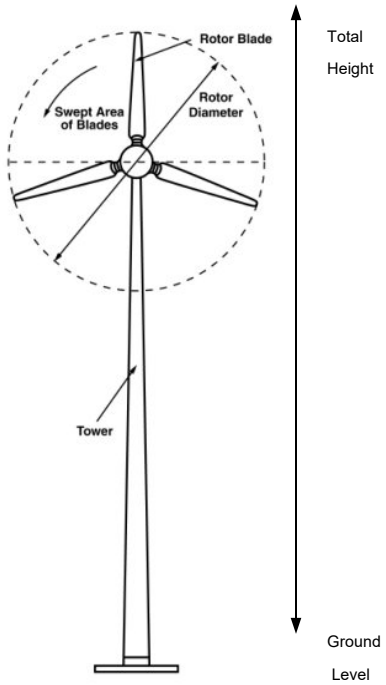

32.16 A WECS shall be setback from a dwelling unit not within the wind farm project boundary (lands leased for wind energy development) not less than 800 m or as meets AUC Rule 012 permitted levels, whichever is greater.

32.17 At no time shall the cumulative modelled sound level of a multi-WECS measured at the wind farm project boundary (including all titled parcels participating in the project) exceed 40dBa unless an easement, as approved by the Development Authority, is agreed to by the affected land owner and registered on the affected title.

32.18 A WECS shall be setback from a developed or undeveloped municipal roadway not less than the total height of the WECS, plus 10 percent.

32.19 Where, in the opinion of the Development Authority, the setbacks referred to in Section 33.18 above are not sufficient to reduce the impact of a WECS from a public roadway or a primary highway, the Municipal Planning Commission may increase the required setback.

32.20 In the case of multiple WECS, setbacks can be increased from the minimum setback requirements in the district depending upon the number of WECS in a group and the prominence of the location, in order to reduce the impact to a residence, building, public roadway or highway, or land use.

Minimum Blade Clearance

32.21 The minimum vertical blade clearance from grade shall be 7.6 m (25 ft) for a WECS employing a horizontal axis rotor unless otherwise required by the Development Authority.

Tower Access and Safety

32.22 To ensure public safety, the Development Authority may require that:

(a) a security fence with a lockable gate shall surround a WECS tower not less than 1.8 m (5.9 ft) in height if the tower is climbable or subject to vandalism that could threaten tower integrity;

(b) no ladder or permanent tower access device shall be located less than 3.7 m (12 ft) from grade;

(c) a locked device shall be installed on the tower to preclude access to the top of the tower;

(d) all of the above be provided or such additional safety mechanisms or procedures be provided as the Development Authority considers reasonable and appropriate;

(e) the use of tubular towers, with locked door access, will preclude the above requirements.

Transmission Lines

32.23 All collector lines (less than 69 kV) on the site of a multi-WECS shall be underground except where the Development Authority approves overhead installation.

Colour and Finish

32.24 Unless otherwise required by the Development Authority, a WECS shall be finished in a non-bright reflective matte and in a colour which minimizes the obtrusive impact of a WECS to the satisfaction of the Development Authority.

32.25 No lettering or advertising shall appear on the towers or blades. On other parts of the WECS, the only lettering will be the manufacturer's identification or municipal symbol.

Conditions of Approval

32.26 As a condition of development permit approval for a multi-WECS, the Development Authority shall consider, in addition to any other conditions authorized under other sections of this Bylaw, attaching conditions related to the following and in accordance with Sections 619 and 620 of the *MGA*:

(a) require the applicant/developer to enter into a road use agreement and/or development agreement with the municipality;

(b) place restrictions on the location, height and type of fencing used for the tower sites;

(c) require compliance with applicable decommissioning and reclamation standards of the day, or if no decommissioning and reclamation standards are in place at the time of application, require compliance with a decommissioning/reclamation plan prepared by the applicant to the satisfaction of the Development Authority;

(d) require that the project commence construction within two years of approval, and complete the project within four years;

(e) require that the operation remain in continuous operation and if the operation is inactive for two consecutive years, or two cumulative years over a five year period, the obligation to decommission the site is automatically triggered;

(f) require that, should the developer propose alteration, retooling or repowering of an existing multi-WECS project where the equipment has changed from the original approval, the developer shall apply for a new development permit; and

(g) the provision of financial security in an amount and type acceptable to the municipality to ensure the decommissioning plan is implemented.

OTHER COMMERCIAL/INDUSTRIAL ENERGY PROJECTS

32.27 All development applications for a Renewable Energy, Commercial/Industrial project, including but not limited to geo-exchange, micro-hydro, carbon capture and storage, bio fuel or fuel cell shall be required to be accompanied by the following information:

(a) an accurate site plan showing and labelling the proposed development and the location of overhead utilities on or abutting the subject lot or parcel, and identification of any sensitive, environmental or topographical features which may be present on the parcel, including canals, streams or water wells;

(b) detailed information on the type of facility, structure or system and the energy process involved;

(c) the manufacturer's specifications indicating (if applicable):

  (i) the rated output in megawatts,

  (ii) safety features and sound characteristics;

(d) the developer shall host a public information meeting, within 60 days prior to submitting a development permit application, which meets the following criteria;

  (i) notification of the meeting is sent to landowners 21 days prior and is provided to landowners within a 2km radius of the project boundary as well as those landowners who are situated along the proposed construction haul route and;

  (ii) the County is notified 21 days prior to the meeting and;

  (iii) a detailed summary is provided to County administration, that includes an outline of the impacts and benefits relayed by attendees and;

  (iv) the meeting summary is included in the development permit application.

(e) any information regarding general public safety;

(f) identification of any impacts to the local road system including required approaches from public roads having regard to County standards;

(g) information regarding setbacks from property lines and the proximity to structures or uses on both the site and adjacent parcels of land;

(h) information or verification of the proposed source of water if required for the type of facility such as an ethanol plant;

(i) a plan outlining how the site will be decommissioned and reclaimed if the use is discontinued;

(j) large commercial/industrial facilities shall submit studies identifying noise, odour and pollutant impacts and how these impacts will be addressed;

(k) an emergency response plan;

(l) a summary report of any and all public consultation that was undertaken by the applicant.

Setbacks

32.28 The structures of a Renewable Energy, Commercial/Industrial use shall comply with all the setbacks as established in the district in which it is located. In addition to the requirements of the district in which the use is located, structures or facilities related to waste-to-energy, anaerobic digesters, biodiesel, or biofuels developments shall not be located within:

(a) a minimum of 250 m (820 ft) from any residential dwelling, food establishment or public use facility or building;

(b) a minimum of 120 m (394 ft) from the boundary or right-of-way of an irrigation district canal, creek, stream, river, lake shore or water body;

(c) the parts of the project related to the transmission lines and associated structures and to the roads, docks, water crossings, culverts, etc. associated with the facility may be allowed within 30 m (100 ft) of a water body or within the water body itself (to the satisfaction of the County and/or all other federal and provincial departments that may have jurisdiction with respect to a proposed project);

(d) the Development Authority may require a larger minimum setback than required as per the above and in the applicable land use district having regard for the location of the development, potential environmental impacts (e.g. air, water – surface and subsurface, soil, etc.), adjacent land uses and any determined natural, scenic or ecologically significant features of the landscape.

Development Standards

32.29 Depending on the type of Renewable Energy, Commercial/Industrial use proposed, the Development Authority may require that the applicant comply with any or all of the following standards and requirements:

(a) the preferred location of Renewable Energy, Commercial/Industrial uses is on parcels designated for industrial land use and located in proximity to highways or railway corridors;

(b) the Development Authority may require a parcel redesignation to the applicable industrial land use district to be considered and approved prior to accepting a development permit application;

(c) all surface drainage must be contained on site and any adjacent water bodies must be adequately protected from run-off;

(d) the applicant is responsible for preparing at their own expense an engineered surface drainage management plan and submitting an application for approval to Alberta Environment and Parks (if applicable);

(e) any biodiesel waste or water contaminated with biodiesel is prohibited to be discharged directly into any sewers or surface waters;

(f) all feedstock and materials are to be stored and contained within buildings, and no outside storage is permitted;

(g) the semi-truck traffic used for the hauling and shipment of raw material or feedstock and finished/processed goods associated with the development shall be limited to a designated truck haul route as stipulated by the County;

(h) all energy transmission lines on the site of the Renewable Energy, Commercial/Industrial use to the substation or electrical grid shall be underground unless otherwise approved by the Development Authority;

(i) the applicant is responsible for securing any necessary approvals from agencies including but not limited to Alberta Environment and Parks, Alberta Utilities Commission and the Alberta Energy Regulator;

(j) the Development Authority may apply to any Renewable Energy, Commercial/Industrial use any other standards that are provided for in this Bylaw, including but not limited to:

(i) require the applicant/developer to enter into a road use agreement and/or development agreement with the municipality,

(ii) the provision of financial security in an amount and type acceptable to the municipality to ensure the decommissioning plan is implemented,

(iii) a condition to allow the developer to proceed with a phased project,

(iv) the provision of site improvements like landscaping, berming or buffering.

SECTION 33 SECOND DWELLING UNITS

33.1 Second dwelling units may be located on a parcel provided that:

(a) the second dwelling unit meets the definition of a developed residence as follows:
  (i) is habitable,
  (ii) has developed legal access,
  (iii) has electrical and gas utilities available to the site,
  (iv) has a supply of potable water and a functional sewage disposal system,
  (v) is situated on a permanent foundation;

(b) no more than one second dwelling unit shall be permitted on any parcel or lot;

(c) the parcel must be a minimum of 1.2 ha (3 acres) in size;

(d) a second dwelling unit may only be permitted on a parcel on which there is already one single detached dwelling unit (main residence);

(e) the second dwelling shall be placed in such a manner so that the two dwellings do not utilize an area greater than 4.0 ha (10 acres). The configuration of the 4.0 ha (10 acre) area must strive to be compact in nature and must be acceptable to the Development Authority;

(f) the second dwelling unit shall be subject to the same minimum required setbacks for front, side and rear yards as the principal dwelling on the parcel;

(g) the applicant may be required to have a professional soil test/analysis done at their expense to ensure that the soil characteristics are capable of supporting multiple septic fields. The analysis must include identifying and confirming the depth to water table to meet provincial requirements. Analyses of the test must be performed and approved by an engineer or approved agency under Alberta Municipal Affairs, with a copy of the report submitted with the development permit application; and

(h) joint access may be required as a condition of approval.

SECTION 34 SERVICE STATIONS AND GAS STATIONS

34.1 The minimum front yard setback to the principal building shall be 12.2 m (40 ft) and no gasoline pumps shall be located closer than 6.1 m (20 ft) from the front property line.

34.2 The side and rear yard shall be 6.1 m (20 ft) with no intervening pumps or accessory structures.

34.3 Maximum site coverage shall be 30 percent.

34.4 The location and installation of the fuel tanks shall be in accordance with safety code and *Alberta Environment Risk Management Guidelines* for Petroleum Storage Tanks.

34.5 The exits and entrances to the station site shall be clearly marked by curb cuts, painted markings, concrete abutments or any other means satisfactory to the Development Authority.

34.6 A chain link fence not less than 0.9 m (3 ft) high may be required around the property to catch debris and trash and provide screening.

SECTION 35 PIPELINES AND OTHER UTILITY CORRIDORS

35.1 Any development involving pipeline and/or power line transmission rights-of-way shall be sited to comply with all relevant federal and provincial legislation. Setbacks from pipelines and other utility corridors shall be in accordance with Part 2 of the *Subdivision and Development Regulation* and any other appropriate Provincial or Federal Regulations or Acts, and any regulations or directives established by the Alberta Energy Regulator (AER) or the Canada Energy Regulator (CER).

SECTION 36 RAILWAYS

The following setbacks shall be applied to subdivision or development applications adjacent to a CPR right-of-way where it is determined necessary or prudent to do so.

Residential

36.1 A residential or a grouped residential subdivision should not be approved unless the parcel size is sufficient to allow the dwelling to be setback a minimum of 30.0 m (98 ft) of the CPR property line.

36.2 A development application for a new residential dwelling on a previously undeveloped parcel should not be approved if the structure is located within 30.0 m (98 ft) of the CPR property line.

36.3 In a hamlet, a development application for a new residential dwelling on a previously undeveloped parcel located within 30.0 m (98 ft) of the CPR property line may be approved at the discretion of the Municipal Planning Commission, subject to the owner entering into and signing a Save Harmless Agreement with Vulcan County, that shall be registered on the land title by caveat prior to the development permit being issued.

37.4 An unoccupied accessory building, such as a garage, storage shed, etc., may be permitted closer than 30.0 m (98 ft), with the applicable land use district minimum setbacks to apply.

Non-residential

36.5 Non-residential developments not serviced by rail should be setback from the track centre line a minimum distance of 15.24 m (50 ft).

Conditions of Approval

36.6 The Development Authority may require the erection of a berm, having regard for the standards in the *Guidelines for New Development in Proximity to Railway Operations* (2013), as a condition of development or subdivision approval, where the minimum setback from the CPR property line cannot be achieved.

36.7 As a condition of approval the Development Authority, at its discretion, may place other conditions on a development permit including the requirement that the developer install a chain link fence along the common property line of the railway, address drainage issues, or other such matters it considers necessary.

SECTION 37 SOUR GAS FACILITIES

37.1 A residence, rural public facility or residential subdivision shall be set back such distance from a sour gas facility as the Development Authority considers reasonable and appropriate, having regard to the comments of the Alberta Energy Regulator and the owner of the sour gas facility.

37.2 The Development Authority shall solicit and consider the comments of the Alberta Energy Regulator and the owner of the sour gas facility if a development application:

(a) proposes to locate a residence or a rural public facility within 100 m (328 ft) of a Level 1 sour gas facility, unless the facility is a pipeline;

(b) proposes to locate a residence within 100 m (328 ft) of a Level 2 sour gas facility;

(c) proposes to locate a rural public facility within 500 m (1,640 ft) of a Level 2 sour gas facility;

(d) proposes to locate a residence within 100 m (328 ft) of a Level 3 or 4 sour gas facility;

(e) would result in unrestricted country development, namely, more than eight dwellings per quarter section within 500 m (1,640 ft) of a Level 3 or 4 sour gas facility; or

(f) proposes to locate a rural public facility within 1.5 km (0.9 miles) of a Level 3 or 4 sour gas facility.

SECTION 38 SHIPPING CONTAINERS

General Standards

38.1 An application for a development permit for a proposed shipping container(s) shall be accompanied by at least two recent colour photographs of each container (one end view and one side view).

38.2 There shall be a principal use on the property where the shipping container is proposed.

38.3 All shipping containers (except those used for accessory purposes to an agricultural use) shall be located in the rear or side yards only, and in accordance with the requirements of the appropriate land use district.

38.4 The maximum number of shipping containers allowed on a lot shall be regulated by the Development Authority.

38.5 Where multiple shipping containers are allowed on a lot they shall be stacked no more than two containers high.

38.6 The Development Authority may require as a condition of approval that any shipping container to be located in the Hamlet Residential, Grouped Reservoir Residential or Grouped Country Residential land use district must be modified (i.e. painted) to the satisfaction of the Development Authority so as to improve its appearance and compatibility with the land use district.

38.7 The Development Authority may require as a condition of approval that any shipping container be screened from view or landscaped and/or cleaned or painted a uniform colour.

38.8 Shipping containers shall not display advertising, company logos, names or other marketing without an approved development permit for a sign, which may be applied for as part of the development permit application for the shipping container.

38.9 The Development Authority may regulate the time period for which a development permit is valid through the issuance of a temporary permit. The validity of a temporary permit shall not exceed one year.

38.10 A development that proposes to convert shipping containers to use as a building or structure for a different use may be considered by the Development Authority subject to the following:

(a) the use is a permitted or discretionary use in the applicable land use district in which the development is proposed;

(b) the shipping container conversion will be able to meet all applicable building and safety code requirements; and

(c) the Development Authority is satisfied that the design, character and appearance of the finished building is compatible with other buildings in the vicinity and that the design, character and appearance of the building is consistent with the purpose of the land use district in which the building is located.

(d) The Development Authority may require engineering reports, structural engineer's stamped schematic drawings, and building inspection reports in consideration of approving a development permit for a shipping container conversion.

Temporary Shipping Containers

38.11 A shipping container may be placed temporarily on a construction site, for the period of construction only, in any land use district without obtaining a development permit subject to the following provisions:

(a) the shipping container is needed in connection with construction of a development for which a development permit has been issued;

(b) the construction site is active (i.e. construction has commenced and is on-going or is about to commence within one week); placement of a shipping container on an inactive construction site is not allowed;

(c) no more than one shipping container is placed on the construction site (a development permit will be required for any additional shipping containers that are required);

(d) the exterior of the shipping container is kept clean and does not display any advertising other than the company logo or trademark;

(e) in a hamlet land use district, the shipping container shall be located a minimum of 3.0 m (10 ft) from the front property line and 1.5 m (5 ft) from the side and rear property lines. On corner lots, placement of the container shall also comply with the corner lot restrictions;

(f) in a rural land use district, the placement of the shipping container shall comply with the minimum setback from roads and property lines;

(g) the shipping container shall be removed immediately upon completion of construction or sooner as may be required by the Development Authority.

Shipping Containers Not Requiring A Development Permit

38.12 In accordance with Schedule 3, a maximum number of shipping containers are allowed without obtaining a development permit subject to the following provisions:

(a) the shipping containers are associated with an approved use or development;

(b) the location of the containers comply with the minimum setback from roads and property lines of the land use district; and

(c) the shipping containers shall not display advertising, company logos, names or other marketing.

SECTION 39 SHOOTING RANGE STANDARDS AND LOCATION CRITERIA

The following standards and criteria will apply for consideration of a development permit application for a shooting (firing) range, including rifle, pistol, shot guns for skeet shooting and archery.

Application Information

39.1 An application must be accompanied by the following information:

(a) a comprehensive site plan illustrating the location of the range and any buildings on the parcel of land, accessory buildings or structures, access and egress to the parcel, parking areas, landscaping, utility easements or corridors. For outdoor ranges, the site plan, or supplementary plan, must illustrate or identify the adjacent land uses within the 2.4 km (1.5 miles) setback distance prescribed in Section 40.2 below;

(b) a surveyed site plan;

(c) the type of water and sewer servicing proposed;

(d) evidence demonstrating compliance with operating licences required by federal or provincial laws;

(e) evidence that the proposal will conform to the *Firearms Act*, and Shooting Ranges Regulations and the RCMP Range Design and Construction Guidelines for Shooting Ranges.

Setbacks

In addition to firing range standards administered by the province, the following minimum separation distances shall be required between firing ranges and land uses that would be sensitive to gunshot noise and range activity:

39.2 Setbacks for outdoor shooting (firing) ranges are:

(a) 2.4 km (1.5 miles) from schools, residences, campgrounds, hospitals, parks, playgrounds, churches and other institutions, recreational trails, shopping centres, and known habitat of rare, threatened or endangered animal species, migratory bird sanctuaries, protected natural areas designated under legislation, deer wintering areas, and industrial areas.

39.3 The direction of fire and orientation of ranges approved must not be toward a public highway, road, trail, developed area or public use area.

39.4 For outdoor archery ranges, the applicable minimum land use district setbacks apply, however, the direction of fire and orientation of ranges approved must not be toward a public highway, road, trail, developed area or public use area.

39.5 Indoor shooting (firing) ranges must be located no closer than 152.4 m (500 ft) to the nearest residence.

Accessory Buildings

39.6 Accessory buildings may be permitted at a firing shooting range provided they are used for purposes incidental to the firing range such as:

(a) firearm safety training;

(b) hunter education;

(c) fundraising and social activities that support a shooting club or organization;

(d) grounds or building maintenance; and

(e) sale of items for the convenience of range users, such as snack foods.

Public Consultation

39.7 Public notification is required prior to the Development Authority rendering a decision on a development permit application. Notification shall be sent to landowners within a 1.6 km (1.0 mile) distance of the site on which a firing range is being proposed.

39.8 The Development Authority may, prior to rendering a decision, require the applicant to hold a public meeting with landowners within a 2.4 km (1.5 miles) distance of the site. If this is required, then the applicant must submit a report regarding the public response to the proposal and copies of all written submissions.

Other Required Approvals

39.9 Notwithstanding that a development permit may be approved by the municipality, this in no way exempts an applicant from being responsible for obtaining all required federal or provincial licenses or approvals.

39.10 As a condition on a development permit approval, the Development Authority may require that the applicant provide a copy of all federal or provincial licenses, approvals or refusals issued by federal or provincial authority with the municipality.

SECTION 40 SIGNS

40.1 The following definitions apply for use classification purposes:

SIGN, CATEGORY 1 means an object or device intended for the purpose of advertising or calling attention to any person, matter, thing or event. Sign typology may consist of the following: election, identification, directional, parking (circulation or restrictions) or real estate.

SIGN, CATEGORY 2 means an object or device intended for the purpose of advertising or calling attention to any person, matter, thing or event. Sign typology may consist of the following: awning/canopy, fascia, freestanding, wall, roof or projecting.

SIGN, CATEGORY 3 means a portable object or device intended for the purpose of advertising or calling attention to any person, matter, thing or event mounted on a standard, column or A-frame or mounted on a vehicle, trailer or wagon fixed to its own self-contained base and capable of being moved manually.

40.2 No sign shall be placed or project within a public road allowance or be attached to any object in a public road allowance except as may be allowed by Alberta Transportation or Vulcan County.

40.3 On privately held land adjacent to provincial highways, the applicant or landowner shall contact Alberta Transportation to ensure the signage is in compliance with the Alberta *Traffic Safety Act* and *Highways Development and Protection Act*. Where required, a copy of the approved Roadside Development Permit shall be submitted as part of the application.

40.4 No more than two Category 2 or 3 signs per parcel are allowed, except if the parcel is in an industrial or commercial land use district.

40.5 All signs shall be maintained in a safe and tidy manner to the satisfaction of the Development Authority.

40.6 A sign shall not be approved where it may negatively affect traffic safety.

40.7 As a condition of approval, the Development Authority may regulate the size, location, materials and design of the sign to ensure that the quality of the sign is suitable in its proposed location.

40.8 Signs proposed to contain any form of illumination (static or non-static) or digital messaging shall be subject to the following:

(a) The illumination for any sign shall be suitably shielded so to not create a direct glare upon the surrounding site, or roadways.

(b) Signs operating or employing a non-static component, like animation, scrolling, flashing, video, motion picture, laser, or other similar projection devices may only be allowed in commercial or industrial districts, at the discretion of the Development Authority.

(c) In no case shall a non-static illuminated or digital sign employ any feature that may have the potential to disrupt the safe operation of motor vehicles.

(d) The Development Authority may regulate any aspect or component of a static or non-static illuminated or digital sign, including the interval of operation, message duration, luminosity, or any other feature.

CATEGORY 1 SIGNS

40.9 No permit is required for the following signs and these signs may be located within the required setback from roads or property lines as established in this Bylaw provided they do not exceed 1.9 m^2 (20 ft^2) or the size stipulated below:

(a) farm/oil and gas identification sign,

(b) dwelling sign or address,

(c) real estate signs,

(d) election signs,

(e) parking signs,

(f) directional signs not greater than 1.9 m^2 (20 ft^2), and

(g) home occupation signs not greater than 3.0 m^2 (32 ft^2) in conjunction with an approved development permit.









CATEGORY 2 SIGNS

40.10 Awning and Canopy Signs

(a) Awning and canopy signs should only be allowed in commercial and industrial districts.

(b) No person should erect an awning sign, a canopy sign, or an under-canopy sign unless such sign is at clearance a minimum of 2.1 m (7.0 ft) from the average ground level at the face of the building; and does not project more than 3.0 m (10 ft) from the face of the building or structure to which it is attached.



(c) Awning or canopy signs which encroach into a road right-of-way may be required to enter into an encroachment agreement with the municipality.

40.11 Billboards

(a) The area of a billboard shall be a minimum of 19.9 m^2 (215 ft^2) and a maximum of 46.5 m^2 (500 ft^2) and the bottom of the sign shall be a maximum 4.6 m (15 ft) above grade.

(b) Not more than one billboard shall be erected within 800 m (2625 ft) of an existing billboard.

(c) A billboard may be allowed in a setback area as established in this Bylaw but must be a minimum of 3.0 m (10 ft) from the property line.

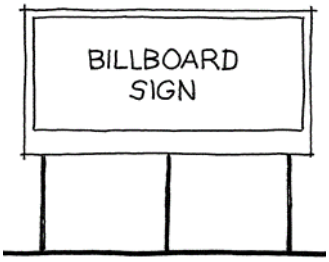

40.12 Fascia Signs

(a) Fascia signs should not be located above any portion of a roadway, or project over public property unless there is a minimum clearance from grade of 2.4 m (8 ft) and a maximum projection of 0.3 m (1 ft).

(b) A fascia sign should not exceed 15 percent of the visible area of the façade of each wall of the building on which it is located and may be illuminated.

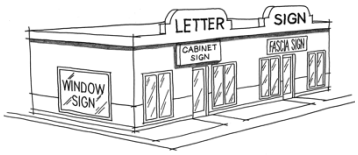

40.13 Freestanding Signs

(a) The maximum area of a freestanding sign shall not exceed 12.0 m^2 (130 ft^2).

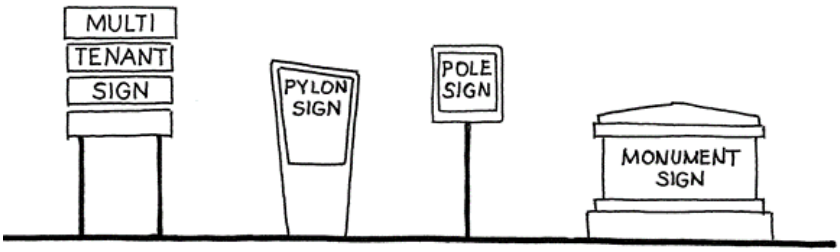

(b) The bottom of a freestanding sign should be a minimum of 1.8 m (6 ft) above grade and the space between the bottom of the sign and the grade should be unobstructed, except for such supports as the sign may require and be placed on a permanent foundation.

(c) A freestanding sign may be located within a setback area as established in this Bylaw but must be a minimum of 3.0 m (10 ft) from the property line.

40.14 Projecting Signs

(a) The nearest edge of a projecting sign should not extend more than 0.3 m (1 ft) from the building face.

(b) No projecting sign should be erected so that the bottom thereof is less than 3.6 m (12 ft) or more above grade.

(c) The maximum area of a projecting sign should be 4.6 m² (50 ft²).

40.15 Roof Mount Signs

(a) Roof signs should be placed on, above or be incorporated as part of the roof of a building.

(b) The maximum area is limited to 50 percent of the copy face which may be allowed to project above the roof of a building.

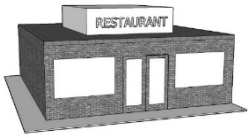

40.16 Wall and Painted Wall Signs

(a) Wall signs should be securely fastened to walls and shall have a maximum horizontal dimension of 6.1 m (20 ft).

(b) Only one painted sign per wall is allowable and shall not exceed 3.1 m (10 ft) in height and 9.1 m (30 ft) in length.

CATEGORY 3 SIGNS

40.17 Portable Signs

(a) The maximum area of a portable sign shall be 5.1 m² (55 ft²). Larger signs will require a variance to be granted.

(b) Portable signs will not require a permit when in place for no more than 30 consecutive days in a calendar year. Permits will be required for a portable sign proposed on site for more than 30 days and shall not exceed a maximum of 90 total days in a calendar year. In accordance with Schedule 3, portable signs exceeding 30 days and erected by the County, Alberta Transportation, CPR, or the RCMP do not require a development permit.



(c) Signs mounted, painted, placed on, attached or affixed to a trailer, truck, automobile, or other form of motor vehicle so parked or placed so that the sign is discernible from a public street or right-of-way as a means of communication for the purpose of conveying a message or advertising require a development permit.



(d) A portable sign may, at the discretion of the Development Authority, be allowed in a setback area as established in this Bylaw but must be a minimum of 3.0 m (10 ft) from the property line.

SECTION 41 SOFT SHELLED BUILDINGS

Soft shelled buildings (i.e. tent garages) are to be considered as permanent buildings or structures and must meet the required setbacks, maximum height, maximum site coverage and other applicable standards of the bylaw. Development permit applications (where not eligible for an exemption under Schedule 3) involving soft-shelled buildings shall be considered with regard to the following:

41.1 Soft shelled buildings shall not be located:

(a) in the front or side yard in any hamlet or Grouped Reservoir Residential district;

(b) shall not be located in the front yard within all other districts; and

(c) shall not be located within the required setback from a public road or on an easement.

41.2 A soft shelled building shall be setback a minimum 3.0 m (10 ft) from the principal dwelling and from all other structures on the same lot.

41.3 A soft shelled building must be securely tethered and anchored to the ground in accordance with provincial safety code requirements. Additionally, all fabric covers must be securely tethered to the structures' frame.

41.4 A soft shelled building shall be maintained in a good state of repair, free of rips and tears.

SECTION 42 WORK CAMPS

42.1 All work camps shall be developed in compliance with the *Work Camps Regulation, Public Health Act, Alberta Regulation 218/2002* as amended.

42.2 A conceptual scheme shall be provided, to the satisfaction of the Development Authority, which indicates the location, design standards and site requirements of the following:

(a) common accessory uses and services, such as washrooms, laundromats, recreational buildings, retail stores, food concessions, fire pits, fire wood storage;

(b) lighting;

(c) water supply;

(d) wastewater disposal facilities;

(e) solid waste collection facilities; and

(f) any other similar uses or services that may be associated or required for the development of a work camp.

42.3 The following regulations shall be applied in designing the work camp site plan:

(a) the road system shall be properly signed for users and for emergency response vehicles, and shall be sensitive to the topography and environmental characteristics of the site;

(b) roads shall be surfaced to the satisfaction of the Development Authority;

(c) all utility services and all utility wires and conduits shall be provided as required by the Development Authority; and

(d) setbacks shall be in accordance with the regulation of the applicable land use district.

SECTION 43 DATA PROCESSING OPERATION

43.1 An application for a data processing operation shall be accompanied by the following additional information:

(a) floor plans, elevations and renderings conveying all proposed buildings and structures that will form part of the facility including trailers, shipping containers, semi-trucks and related storage buildings;

(b) a breakdown of the number of computer units, fans and any pertinent information concerning their anticipated noise impacts;

(c) noise impact assessment (NIA) completed by a qualified professional which measures sound from the proposed facility to the nearest dwelling/ or building. The assessment shall be undertaken in accordance with the principals specified in the AUC Rule 012 or a comparable standard, regardless of whether the proposed operation involves the on-site generation of electric energy.

(d) a fire protection plan; and

(e) any other information that may be required by the Development Authority.

43.2 Proposals for data processing operations integrating an on-site power plant or backup power source shall indicate the total MW at full build-out, and any pertinent information concerning their anticipated noise impacts. All structures related to energy generation shall be indicated on the site plan.

43.3 An application for a data processing operation that draws its power from the electricity grid shall be accompanied by verification in writing from the electrical service provider that the projected consumption of the proposed use can be accommodated and that the utility supply equipment and related infrastructure is sufficiently sized to accommodate the proposal.

43.4 The applicant using on-site power plant generation shall submit:

(a) a proof of exemption of an approval for applications utilizing an on-site plant generating less than 10 megawatts (MW)

(b) a copy of any approvals required for applications utilizing an on-site power plant generating 10 MW or more.

43.5 At all times during the operation of the data processing operation noise compliance shall be:

	Dwelling density per quarter section of land					
Proximity to Transportation	**1 to 8 dwellings**		**9 to 160 dwellings**		**Greater than 160 dwellings**	
	Daytime	Nighttime	Daytime	Nighttime	Daytime	Nighttime
Category 1	50 dB	40 dB	53 dB	43 dB	56 dB	46 dB
Category 2	55 dB	45 dB	58 dB	48 dB	61 dB	51 dB
Category 3	60 dB	50 dB	63 dB	53 dB	66 dB	56 dB

Category 1: dwelling(s) distance is more than or equal to 500 metres (m) from heavily travelled roads or rail lines and not subject to frequent aircraft flyovers from proposed development.

Category 2: dwelling(s) distance is more than or equal to 30 m, but less than 500 m from heavily travelled roads or rail lines and not subject to frequent aircraft flyovers from proposed development.

Category 3: dwelling(s) distance is less than 30 m from heavily travelled roads, or rail lines or subject to frequent aircraft flyovers from proposed development.

	Daytime	Nighttime
Other parcels zoned for Industrial purposes	75 dB	70 dB

43.6 Facilities used in conjunction with data processing operations shall integrate noise management strategies to achieve noise compliance, including but not limited to exhaust baffles, roof and site extensions on the exhaust side of buildings, sound-absorbent padding, and fire-resistant sound-absorbing walls. Where the above mentioned measures do not adequately mitigate sound to achieve noise compliance specified in section 44.5, more sophisticated sound mitigation shall be required prior to the commencement of operations.

43.7 In response to noise complaints:

(a) by residents, the data processing operation that is subject to those complaints may, at the discretion of the Development Authority, be required to undertake sound level testing at the location of most affected dwelling to demonstrate that the noise threshold is not exceed.

(b) by operators of other properties within the industrial or other adjacent land use district, the Development Authority may determine that noise compliance testing is required to demonstrate compliance.

(c) any required compliance testing shall be undertaken at the expense of the applicant.

SECTION 44 BATTERY ENERGY STORAGE SYSTEMS

This section establishes standards for the development of battery storage for energy projects having the purpose of storing energy for later dispersal on the commercial market. Typically, this use will include chemical battery systems for the storage and distribution of energy but is not limited thus. For example, other non-typically energy storage means like Pumped Hydro Energy Storage and Gravity Energy Storage.

NOTE TO READER: *The Alberta Utilities Commission (AUC) regulates large scale/commercial energy projects. The County's regulatory role is limited and established under sections 619 and 620 if the MGA. Where AUC approval has been applied for or received, a copy of the application submitted to the AUC may be used to satisfy some or all of the development permit application requirements.*

44.1 No development permit is required for installation of a Battery Energy Storage System rated less than 1 MW.

44.2 Prior to making a decision on a development application for a Battery Energy Storage System, the Development Authority should refer and consider the input of any of the following agencies and departments (as the case may be depending on the type of application):

(a) Transport Canada;

(b) NAV Canada;

(c) Alberta Culture and Tourism;

(d) Alberta Forestry and Parks;

(e) Alberta Environment and Protected Areas;

(f) Alberta Transportation and Economic Corridors;

(g) Alberta Electric Systems Operator (AESO);

(h) Alberta Utilities Commission (AUC).

Notification & Public Consultation

44.3 Upon receipt of a development permit application for a Battery Storage System use, the Development Authority shall review the application for completeness, prior to making a decision on the application:

(a) determine whether the application is proposing to co-locate with an existing approved Power Plant facility, and if determined to be so, the notification requirements under (e), are not required.

(b) notify landowners and residents, by mail, within 2 KM (1.2 miles) of the proposed development site (or more, at the discretion of the Development Authority);

(c) notify adjacent municipalities in accordance with the applicable Intermunicipal Development Plan;

(d) refer the application to all relevant agencies and government departments; and,

(e) the developer shall host a public information meeting, within 60 days prior to submitting a development permit application, which meets the following criteria:

i. notification of the meeting is sent to landowners 21 days prior and is provided to landowners within a 2km radius of the project boundary as well as those landowners who are situated along the proposed construction haul route and;

ii. the County is notified 21 days prior to the meeting and;

iii. an in-depth summary is provided to County administration, that includes but is not limited to, an outline of the impacts and benefits relayed by attendees, and how the proponent intents on addressing the matters and;

iv. the meeting summary is included in the development permit application.

Development Permit Application Documents

44.4 Development permit applications for Battery Energy Storage Systems shall be accompanied by the following additional information:
Site Suitability Access:

(a) a site suitability analysis including but not limited to: topography, soil characteristics, environmental features and issues, accessibility to a road, compatibility with surrounding land uses, potential impacts to agricultural land and irrigation operations, potential visual impacts, storm water management, and consistency with the policies of the Municipal Development Plan and Bylaw;

(b) information regarding setbacks from public roads, property lines and the proximity to structures or uses on the site and adjacent parcels of land;

(c) information regarding setbacks from structures or uses on the subject site to neighbouring residential dwellings and non-residential developments on adjacent parcels of land;

(d) a summary of any public consultation undertaken to date;

(e) access to an any potential impacts to public roads;

(f) preliminary grading/drainage plan, including a site construction/grading plan with details on proposed management practices for any soil stripping and erosion control, and proposed construction haul route;

(g) a statement describing the project's relationships to the South Saskatchewan Regional Plan;

(h) if required by the Development Authority, an Environment Site Assessment prepared by a qualified professional and/or other studies and reports to demonstrate site suitability and impact mitigation

Development Permit Application Documents

(i) all systems must adhere to the standards required under National Fire Protection Association (NFPA) documentation, including by not limited, NFPA 855 regarding the standard for installation of stationary energy storage system.

(j) detailed information about the storage system type, number of units and their component structures, dimension of structures, and Canadian Standards Association (CSA) certification for components;

(k) an Emergency Response Plan containing information regarding responses to various emergency scenarios, including fires, electrical hazards and other emergencies.

(l) Information regarding general public safety and security measures including site fencing

Agricultural Services

(m) plans and methods of weed control and erosion mitigation;

(n) a decommissioning plan in accordance with section 44.7 below;

Site Suitability Considerations

44.5 In the Rural General – "RG" land use district, applicants are encouraged to considering the following when selecting sites:

(a) use of the poor quality lowest productive land, dry corners and poor agricultural land is preferred;

(b) use of cut-off, fragmented, irregular shaped parcels is preferred;

(c) the use of a primarily unsubdivided quarter-section or agricultural parcels 32.4 ha (acres) or greater in size of high quality irrigated agricultural land (land with irrigation rights) that has or could contain irrigation system infrastructure should be avoided;

(d) environmentally sensitive and environmentally significant areas, including wetlands or intact native grasslands, should be avoided; and

(e) Battery Energy Storage Systems are not to be located within 300 m, (984.3 ft) of an individual residential dwelling on an adjacent parcel, and 750 m (2460.6 ft) from a boundary of a designated group country residential, grouped reservoir residential or rural recreational district, hamlet, village or town, as measured from the closest point of the battery storage system infrastructure to the adjacent residence, district, hamlet, village or town.

Standards for Development

44.6 In addition to the required setbacks and any other criteria of the applicable land use district and any other relevant provisions of this Bylaw, a Battery Energy Storage System shall adhere to the following development standards:

(a) the location shall be developed in such a manner that the development grounds and surrounding area is composed of a fire retardant and non-combustible material, such as gravel, concrete or similar material for 30.5 m (100 ft) surrounding the Battery Energy Storage System, measured from the external walls of the BESS units and no flammable structures are contained within that same area;

(b) suitable fencing must be installed to provide security and discourage trespassing;

(c) signage shall be installed on the permitter on the fence and gate indicating:

i. the hazard present on site

ii. that access t the site is restricted

iii. the emergency response contact name and number

iv. pertinent information for first responders

(d) all surface draining must be contained on site and any adjacent water bodies must be adequately protected from run-ff;

(e) weed control shall be required for the lifespan of the battery energy storage system development and dealt with in a comprehensive manner ensuring adjacent landowners are not negatively affected;

Decommissioning

44.7 Decommissioning and reclamation shall take place in compliance with the applicable provincial standards of the day the site is decommissioned. If no standards are in place at the time of a development permit application, the applicant shall provide a plan outlining now the site will be decommissioned and reclaimed to the site's predevelopment state. The decommissioning plan shall include information on:

(a) treatment of footings and energy storage system components;

(b) reclamation of roads, driveways, pathways, and other similar disturbances;

(c) notice to be given to landowners and the County;

(d) containment of hazardous materials;

(e) site security;

(f) haul routes for disposal materials;

(g) the requirement for battery energy storage system removal after a certain period of inactivity; and

(h) discussion of the timetable for decommissioning plan.

Security

44.8 As a condition of development approval, the County may require security, in a form satisfactory to the Development Authority, to ensure the Reclamation/Decommissioning Plan is implemented and to cover assignment and bankruptcy. The condition may include a periodic review of the security to ensure the amount is sufficient to implement the Reclamation/Decommissioning Plan.

Validity

44.9 Should a Battery Energy Storage System discontinue use for a minimum of two consecutive years, or two cumulative years over a five-year period, the operator shall provide a report on the status of the Battery Energy Storage System to the County. A review of the status report by the Municipal Planning Commission may result in a require for the energy storage system to be decommissioned. Failure to comply with a decommissioning require may result in the issuance of a stop order by the County in accordance with the provisions of the MGA.

Conditions of Approval

44.10 As a condition of development permit approval for a Battery Energy Storage System (BESS), the Development authority shall consider, in addition to any other conditions authorized under other sections of this Bylaw, attaching conditions related to the following and in accordance with Sections 619 and 620 of the MGA:

(a) require the applicant/developer to enter into a road use agreement and/or development agreement with the municipality;

(b) place restrictions on the location, height and type of fencing used for the site;

(c) require the application of approved weed control measures;

(d) require that the development grounds and surrounding area is comprised of a fire retardant and non-combustible material, such as gravel, concrete or similar material;

(e) stipulate grading, stockpiling, weed control and soil erosion measures;

(f) the provision of an emergency /fire suppression management plan;

(g) require compliance with applicable decommissioning and reclamation standards of the day, or if no decommissioning and reclamation standards are in place at the time of application, require compliance with a decommissioning/reclamation plan prepared by the applicant to the satisfaction of the Development Authority;

(h) require that the project commence construction within two years of approval, and complete the project within four years;

(i) require that the operation remain in continuous operation and if the operation is inactive for two consecutive years, or two cumulative years over a five-year period, the obligation to decommission the site is automatically triggered; and

(j) the provision of financial security is an amount and type acceptable to the municipality to ensure the decommissioning plan is implemented.

Schedule 6

TELECOMMUNICATION SITING PROTOCOL

Schedule 6

TELECOMMUNICATION SITING PROTOCOL

This Schedule serves as the protocol for the installation and modification of telecommunication, radio-communication and broadcasting antenna systems (antenna systems) in Vulcan County. The protocol establishes the procedural standard for public participation and consultation that applies to proponents of antenna systems and identifies Vulcan County's preferred development and design standards.

SECTION 1 APPLICABILITY

The federal Minister of Industry is the approval authority for the development and operation of antenna systems, pursuant to the *Radiocommunication Act*. Innovation, Science and Economic Development Canada recognizes the importance of considering input from local Land Use Authorities and the public regarding the installation and modification of antenna systems and encourages land use authorities to establish a local protocol to manage the process of identifying and conveying concerns, questions and preferences to the proponent of an antenna system and Innovation, Science and Economic Development Canada.

The local protocol established in this Schedule applies to any proposal to install or modify a telecommunication, radiocommunication or broadcast antenna system within Vulcan County which is not excluded from the consultation requirements established by Innovation, Science and Economic Development Canada in Client Procedures Circular CPC-2-03 (or subsequent/amended publications). Proponents of excluded antenna systems are nevertheless encouraged to contact Vulcan County to discuss the proposal and identify any potential issues or concerns and give consideration to the development and design standards in Section 3 of this Schedule.

Antenna Systems Siting Protocol Exclusion List:

1.1 Innovation, Science and Economic Development Canada has determined that certain antenna structures are considered to have minimal impact on the local surroundings and do not require consultation with the local Land Use Authority or the public. Innovation, Science and Economic Development Canada's publication, Radiocommunication and Broadcast Antenna Systems CPC-2-0-03 lists the types of antenna installations exempted from the requirement to consult with the local Land Use Authority and the public. The installations listed in CPC-2-03 are therefore excluded from the Siting Protocol, which currently include:

(a) maintenance of existing radio apparatus including the antenna system, transmission line, mast, tower or other antenna-supporting structure;

(b) addition or modification of an antenna system (including improving the structural integrity of its integral mast to facilitate sharing), the transmission line, antenna-supporting structure or other radio apparatus to existing infrastructure, a building, water tower, etc. provided the addition or modification does not result in an overall height increase above the existing structure of 25 percent of the original structure's height;

(c) maintenance of an antenna system's painting or lighting in order to comply with Transport Canada's requirements;

(d) installation, for a limited duration (typically not more than 3 months), of an antenna system that is used for a special event, or one that is used to support local, provincial, territorial or national emergency operations during the emergency, and is removed within three months after the emergency or special event; and

(e) new antenna systems, including masts, towers or other antenna-supporting structure, with a height of less than 15.0 m above ground level.

1.2 Proponents who are not certain if their proposed structure is excluded, or whether consultation may still be prudent, are advised to contact Vulcan County or Innovation, Science and Economic Development Canada for guidance.

SECTION 2 MUNICIPAL REVIEW AND ISSUANCE OF CONCURRENCE OR NON-CONCURRENCE

2.1 The Municipal Planning Commission shall be responsible for reviewing and issuing municipal concurrence or non-concurrence for all antenna system proposals within Vulcan County which are not excluded under Section 1.1 of this Schedule.

2.2 Concurrence with a proposal will be measured against the requirements of the applicable land use district within which the antenna system is proposed, the development and design standards in Section 3 of this Schedule, applicable policies of the Vulcan County Municipal Development Plan, and consideration of comments received during the public consultation process (Section 5 of this Schedule) and any other matter deemed relevant by the Municipal Planning Commission:

(a) when a proposal is given a concurrence decision, the proponent will receive a letter of concurrence from the Municipal Planning Commission documenting its decision and any conditions;

(b) when a proposal is given a non-concurrence decision, the proponent will receive a letter of non-concurrence from the Municipal Planning Commission describing the reasons for the decision.

2.3 Municipal concurrence does not constitute approval of uses, buildings and structures which require issuance of a development permit under the Land Use Bylaw. A proposal which includes uses, buildings or structures in addition to the antenna system, is required to obtain development permit approval for such uses, buildings and structures in accordance with the provisions of the Land Use Bylaw.

SECTION 3 DEVELOPMENT AND DESIGN STANDARDS

Vulcan County requests that the following antenna systems development and design standards be adhered to:

Co-utilization

3.1 Co-utilization of existing antenna systems is the preferred option within Vulcan County and is encouraged whenever feasible. Vulcan County recognizes that while this is the preferred option, co-utilization of existing antenna systems is not always possible.

Public Roadway Setbacks

Rural:

3.2 In order to facilitate future widening/service road dedication and reduce potential snow drifting/sight restrictions, an antenna system (including any guy wires or similar support mechanisms) should be placed no closer than 30.5 m (100 ft) from the registered road right-of-way. A lesser setback may be considered at the discretion of the Municipal Planning Commission on a site-specific basis.

Hamlet:

3.3 An antenna system (including any guy wires or similar support mechanisms) proposed within a hamlet should be placed no closer than 7.62 m (25 ft) from the property line abutting the public road. A lesser setback may be considered at the discretion of the Municipal Planning Commission on a site-specific basis.

Locational Criteria

3.4 Antenna systems should maintain an adequate setback from coulees and steep slopes, consistent with the setback requirements in Schedule 4, Land Suitability and Servicing Requirements.

3.5 Proponents should consult the *Vulcan County Environmentally Significant Areas (1988)* or Environmentally Significant Areas of Alberta as identified by Alberta Environment and Parks, to determine whether the proposed location of the antenna system is within an environmentally significant area. If the proposed site of the antenna systems is located within an identified environmentally significant area, the proponent should submit documentation to the Municipal Planning Commission demonstrating site suitability.

Lighting and Signage

3.6 Aerial crop spraying is a regular occurrence in Vulcan County and vital to the Municipal Development Plan goal of supporting agricultural pursuits. While aerial crop sprayers are encouraged to undertake comprehensive site reconnaissance, it is the preference of Vulcan County that all antenna systems be lighted and marked as follows to help minimize aeronautical hazard:

(a) the antenna should be marked with alternating bands of aviation orange and white paint or other approved Transport Canada colour combinations;

(b) the top of the antenna should be lit with a flashing strobe light or other Transport Canada approved lighting;

(c) the antenna guy wires (or other similar support cables, lines, wires) should be marked with aviation balls or other Transport Canada approved markers.

3.7 Proponents for antenna structures which are visible from higher density residential areas may be requested to employ innovative design measures to mitigate the visual impact of these structures. The proponent shall provide stealth structure options when requested by the municipality. Stealth structure options will be based on an evaluation of the massing, form, colour, material, and other decorative elements, that will blend the appearance of the facility into and with the surrounding lands.

3.8 The placement of signage on antenna systems is not permitted, except where required by applicable federal agencies.

SECTION 4 APPLICATION SUBMITTAL REQUIREMENTS

4.1 Proponents are encouraged to contact Vulcan County in advance of making their submission to obtain information about the County's Antenna Systems Siting Protocol and identify any preliminary issues or concerns.

4.2 The following application package shall be submitted to Vulcan County for consideration of a proposed antenna system:

(a) a completed Telecommunication Antenna Siting Protocol application, including site plan;

(b) the prescribed fee;

(c) a description of the type and height of the proposed antenna system and any guy wires or other similar support mechanisms (e.g. support cables, lines, wires, bracing);

(d) the proposed lighting and aeronautical identification markings for the antenna and any supporting structures;

(e) documentation regarding potential co-utilization of existing towers within 800 m (0.5 miles) of the subject proposal; and

(f) any other additional information or material the Municipal Planning Commission determines to be necessary and appropriate to properly evaluate the proposed submission.

4.3 Proposals for freestanding telecommunication antennas shall not be required to obtain a development permit unless buildings or structures are also proposed in addition to the antenna system and supporting structures. For such proposals, the following shall be submitted in addition to the requirements of 6(b):

(a) a completed development permit application;

(b) the prescribed fee.

SECTION 5 NOTIFICATION AND PUBLIC CONSULTATION PROCESS

5.1 Proponents are required to formally notify the Development Authority of their intent to make a submission to obtain a letter of concurrence regarding the siting of a telecommunication antennas within Vulcan County prior to landowner notification or advertisement of the proposed project.

5.2 If required by the Municipal Planning Commission, the proponent shall hold a public information meeting regarding their development proposal and should proactively explain all aspects of the siting, technology and appearance of the proposed structure.

5.3 Once approval to proceed to public consultation has been given by the Municipal Planning Commission, the applicant or the municipality will notify all land owners within:

(a) a distance of 1.6 km (1 mile) of the proposed structure 20.0 m (66 ft) in height or less; or

(b) a distance of 3.2 km (2 miles) of the proposed structure greater than 20.0 m (66 ft); and

(c) all costs of the notification are borne by the applicant.

5.4 With each notification to adjacent landowners, the proponent will be responsible to submit a letter providing information regarding the location of the tower, physical details of the tower, the time and location of the public information meeting, and a contact name and phone number of someone employed by the proponent who can answer questions regarding the proposal. The notifications should be sent 25 days prior to the public meeting.

5.5 Within 25 days from date of circulation of the notification or the date of the public information meeting, the proponent will be responsible to provide the Municipal Planning Commission with a summary of the meeting indicating the topics discussed, additional concerns raised with resolutions, and any outstanding issues that the proponent and/or landowners could not resolve.

5.6 Where the public process has raised unresolved concerns, Vulcan County will request a ruling by Innovation, Science and Economic Development Canada prior to the issuance of a letter of concurrence

APPENDIX A

FORMS AND FEES

APPLICATION FOR DEVELOPMENT PERMIT

OFFICE USE ONLY			
Application No.	Roll No.	Deemed Complete ☐ Yes ☐ No	Date of Completion
Date Received	Division	Land Use District	
Application Fee ($)	Fire Dept.	Use	
Date Application Fee Received	Gas Coop	Land Title Verified ☐ Yes ☐ No	

1) APPLICANT AND LAND INFORMATION

Applicant Name: _____
Phone: _____ Email: _____
Mailing Address: _____

IF APPLICANT IS NOT THE REGISTERED OWNER
Applicant's Interest In Property ☐ Agent ☐ Contractor ☐ Tenant Other: _____
Registered Owner's Name: _____
Phone: _____ Email: _____
Mailing Address: _____

Quarter: _____ Section: _____ Township: _____ Range: _____ W4M
Plan: _____ Block: _____ Lot: _____
Municipal Street Address (If Applicable): _____
Parcel Area Acres: _____ Hectares: _____

Existing Development
Please detail existing buildings, structures, uses, and improvements existing on the parcel.
(If they will be altered as part of this application, please detail the improvements)

2) DEVELOPMENT DETAILS

Proposed Development

Please detail the proposed development including uses, buildings, structure, and any other planned renovations or improvements; including the dimensions of each.

Estimated Commencement Date: _____ Estimated Completion Date: _____

Estimated cost of the project ($): _____

For **residential** developments please check all applicable boxes below:

- ☐ Single detached dwelling
- ☐ Semi-detached dwelling
- ☐ Ready-to-move home (new)
- ☐ Moved-in dwelling (previously occupied)
- ☐ Modular home
- ☐ Manufactured home 1 (new)
- ☐ Manufactured home 2 (previously occupied)
- ☐ Accessory building to approved use
- ☐ Accessory building prior to principal building
- ☐ Other:

3) Other

Access

Is the parcel adjacent to an existing developed roadway? ☐ Yes ☐ No

Is the parcel currently subject to an Approach Agreement with Vulcan County? ☐ Yes ☐ No

Servicing

Please indicate how the proposed development will be serviced

Water Supply

☐ Cistern ☐ Well ☐ Dugout ☐ Coop

Other: _____

Sewer Servicing

☐ Septic Tank ☐ Septic Field ☐ Communal

Other: _____

Location

Please indicate if any of the following are within 1.6 km (1 mile) of the proposed development

- ☐ Provincial Highway
- ☐ Confined Feeding Operation
- ☐ Sour gas well or pipeline
- ☐ Sewage Treatment Plant
- ☐ Waste Transfer Station or Landfill
- ☐ River or Waterbody

Please indicate if any of the following are within 800m (1/2 mile) of the proposed development

- ☐ Slope of 15% or greater
- ☐ Existing multi-lot residential subdivision

4) Declaration

I/We have read and understand the terms noted below and hereby apply for a development permit to carry out the development described within this application including any attached forms, plans, and documents.

I/We hereby certify that all plans and information submitted are, to the best of my knowledge, true and correct.

I/We hereby certify that the registered owner of the land is aware of and in agreement with this application.

I/We hereby give consent to allow authorized persons the right to enter the subject land and/or building(s) for the purpose of an inspection with respect to this application.

Date: _____ Applicant's Signature: _____

Date: _____ Registered Owner's Signature: _____
(Required If Different from Applicant)

5) Development Permit Process

1. The Development Permit Application is to be submitted along with the application fee as described in the Fees for Service Bylaw and any additional information as indicated in Appendix A.

2. The County office will then notify adjacent landowners and may place an ad in the Vulcan Advocate respecting the proposed development.

3. You will receive a copy of the Notice of Decision and Development Permit Application in the mail dated the day the Development Permit was approved, although the Development Permit is not valid until 21 days after the Date of Issue of Notice of Decision.

4. The Development Permit is subject to all conditions specified on the Development Permit.

5. After the advertisement period a copy of the Development Permit and Notice of Decision will be sent to all relevant stakeholders which may require a copy of the approved development permit.

6. If your application has been refused or approved subject to conditions set forth by the Development Authority, you can appeal the decision to the **SUBDIVISION AND DEVELOPMENT APPEAL BOARD** or **LAND AND PROPERTY RIGHTS TRIBUNAL**, as specified on in the Development Permit or Notice of Refusal. If an applicant wishes to appeal the decision, a written notice of appeal must be served to the Vulcan County Planning and Development Department **within 21 days of the Date of Issue of Notice of Decision**. Vulcan County's Planning and Development Department will then forward the appeal to the relevant appeal body. Appeals may be mailed to:

VULCAN COUNTY PLANNING AND DEVELOPMENT
180 VULCAN, ALBERTA T0L 2B0
Phone 403-485-2241 Fax 403-485-2920

APPENDIX A – Additional Information

All items indicated below by the Development Authority are required for an application to be deemed complete.

- ☐ Site Plan, including:
  - Location of the proposed development on the parcel, and
  - Distances from the proposed development to existing structures and property lines.
- ☐ Identification of any potential impacts the proposed development may have on the enjoyment or use of nearby lands, including:
  - A summary of potential impacts, and
  - Steps to be taken to minimize impacts on nearby lands.
- ☐ Summary of any consultation with any people who may be affected by the proposed development, including:
  - How consultation was implemented;
  - Who was successfully contacted;
  - Summary of comments from affected parties, and
  - Steps to be taken to address any concerns raised.
- ☐ Overview of Existing Site Conditions, including:
  - Existing vegetation, waterbodies, and any unique species or topographical features;
  - Description and justification for proposed changes or impacts on existing vegetation, waterbodies, and any unique species or topographical features
- ☐ Description of Proposed Operations, including:
  - Hours of Operation;
  - Hours of Construction, and
  - Site Security and, where necessary, signage.
- ☐ Transportation Plan, including:
  - Proposed use of existing roads including, where necessary, haul routes, and
  - Proposed construction of new roads, including the proposed standard of construction
- ☐ Waste Management Plan.
- ☐ Reclamation Plan.
- ☐ Historical Resource Overview (HRO) and, if necessary, a Historical Resource Impact Assessment.
- ☐ Biophysical Impact Assessment.
- ☐ Geotechnical Report, including Slope Stability Analysis if any slopes are greater than 15%.
- ☐ Stormwater Management Plan.
- ☐ Water/Wastewater Servicing Strategies.
- ☐ Traffic Impact Assessment.
- ☐ Phase 1 Environmental Site Assessment.
- ☐ Groundwater Impact Analysis and Soils Study.
- ☐ Erosion Control Strategy.
- ☐ Architectural Control Guidelines.
- ☐ Other:

102 Centre Street, Vulcan Alberta T0L 2B0 Phone (403) 485-2241
www.vulcancounty.ab.ca Fax (403) 485-2920

FOR OFFICE USE ONLY
Form I
Application No. _____
Fees Submitted: $_____
Site Inspection: _____

APPLICATION FOR A BYLAW AMENDMENT

APPLICANT: _____ **Telephone:** _____

ADDRESS: _____ **Fax:** _____

_____ **Bus/Cell:** _____

REGISTERED OWNER: _____ **Telephone:** _____

LEGAL DESCRIPTION: Lot(s) _____ Block _____ Plan _____

OR: Quarter _____ Section _____ Township _____ Range _____ W ____ M

PROPOSED AMENDMENT:

From: _____

To: _____

APPLICANT'S SUBMISSION: Please state your reasons for applying for this amendment and if applicable, supply details of future plans/development, complete with sketches that illustrate the proposal. Attaching separate sheets will be necessary.

_____

_____

_____

_____

REGISTERED OWNER OR PERSON ACTING ON BEHALF OF: I/we agree to the collection and sharing of this information contained in this application, and any other information that may be required to verify and evaluate this application as explained above. I have submitted particulars concerning the completion of the proposed development and agree to comply in all respects with any conditions that may be attached to any development permit that is issued and with any other bylaws that are applicable. I am aware that I may be required to pay for all local improvement costs, which include drainage, sidewalks, road construction, street lighting, water and sewer main extensions, utility connection fees and installation costs at the present established rate.

I have read and understand the terms noted above and hereby apply for that described above and/or on the attached plans and specifications. I further certify that the registered owner(s) of the land described above is aware of this application.

DATE: _____ **SIGNED:** _____

DATE: _____ **SIGNED:** _____

Applicant (s)

Please note that all information that you provide will be treated as public information in the course of the municipality's consideration of the development application pursuant to the MGA RSA 2000 Chapter M-26 and the Land Use Bylaw. By providing this information, you are deemed to consent to its public release. Information you provide will only be used for purposes related to the evaluation and consideration of the development application. Questions about information can be directed to the FOIPPA Coordinator, Box 180, Vulcan AB T0L 2B0, 403-485-3102.

I, _____, hereby consent to the public release and disclosure of all information contained within the application and supporting documentation as part of the subdivision/development process.

Applicants Signature: _____ Date Signed: _____

VULCAN COUNTY
TELECOMMUNICATION SITING PROTOCOL APPLICATION & CHECKLIST

Date of Application: _____

PART 1 - APPLICANT INFORMATION

Name of Applicant (please print): _____

Mailing Address: _____

_____

_____

Postal Code: _____

Phone (primary): _____

Phone (alternate): _____

Fax: _____

Email: _____

❑ Check this box if you would like to receive documents through email.

Is the applicant the owner of the property? ❑ Yes ❑ No

IF "NO" please complete box below

Name of Owner: _____

_____

Mailing Address: _____

_____

_____

Postal Code: _____

Phone: _____

Alternate: _____

Applicant's interest in the property:

- ❑ Agent
- ❑ Contractor
- ❑ Tenant
- ❑ Other _____

PART 2 - PROPERTY INFORMATION

Municipal Address: _____

Legal Description: All/Part ____ ¼ Section ____ Twp ____ Range ____ W of ____ Meridian

Lot(s) _____ Block _____ Plan _____

Land Use District: _____

Parcel size/area: _____

What is the existing use? _____

PART 3 - DETAILS OF THE PROPOSED DEVELOPMENT

What currently exists on the parcel?

What will the antenna / tower be used for?

Are there any roads or approaches on the parcel? (THIS DOES NOT INCLUDE OIL/GAS FACILITY ACCESSES)

TOWER SIZE

Overall tower height _____ ❑ m ❑ ft Commencement Date: _____

DECLARATION OF APPLICANT/AGENT

The information given on this form is full and complete and is, to the best of my knowledge, a true statement of the facts. I also consent to an authorized person designated by the municipality to enter upon the subject land and buildings for the purpose of an inspection during the processing of this application.

APPLICANT Registered Owner (if not the same as applicant)

Please note that all information that you provide will be treated as public information in the course of the municipality's consideration of the development application pursuant to the MGA RSA 2000 Chapter M-26 and the Land Use Bylaw. By providing this information, you are deemed to consent to its public release. Information you provide will only be used for purposes related to the evaluation and consideration of the development application. Questions about information can be directed to the FOIPPA Coordinator, Box 180, Vulcan AB T0L 2B0, 403-485-2241.

I, _____ , hereby consent to the public release and disclosure of all information contained within the application and supporting documentation as part of the subdivision/development process.

Applicant's Signature: _____ Date Signed: _____

VULCAN COUNTY
TELECOMMUNICATION SITING
PROTOCOL
APPLICATION & CHECKLIST

TELECOMMUNICATION SITING PROTOCOL CHECKLIST

A COMPLETED APPLICATION REQUIRES:

1. A completed checklist
2. Non-refundable application fee
3. Signature of ALL landowners
4. Any additional information requested by the Development Authority

CHECKLIST INFORMATION:

- Failure to complete the Application or supply the required information, plans or fees may cause delays in application processing.
- The Development Authority may refuse to accept your application if the required information has not been supplied or if the quality of the information is inadequate to properly evaluate the application.
- Once the information has been reviewed, Vulcan County will either:
    - Issue a municipal concurrence letter to the applicant, or
    - Issue a letter which outlines the municipality's concerns and/or conditions to the applicant and Industry Canada
- Safety code permits may be required for construction of buildings/tower foundations, plumbing, private sewage systems, and gas or electrical installations (as may be applicable to individual installations).

FEES		
Copying and distribution of required notification letters	$1.50/letter	Payment required for distribution of letters will be the application fee
Distribution of required notification letters	$1.00/letter	
If the applicant can prove that notification to all required adjacent landowners has been done, then no fee is required.		
For fees not listed here, please see Vulcan County's **Fees for Service Bylaw**		

CHECKLIST

Please attach a description of the project summarizing the information required in the following table.

REQUIREMENT	IS THIS REQUIRED? YES OR NO	SUBMITTED? YES, NO OR N/A
CO-UTILIZATION (CO-LOCATION) – RURAL Are there any other such structures within a radius of 2 miles (3.22 KM) of the proposed location?		
If YES, please provide a site plan showing the locations of these and provide documentary evidence that co-utilization of the existing structure(s) is not a viable alternative to a second structure.		
CO-UTILIZATION (CO-LOCATION) – HAMLET, GROUPED COUNTRY RESIDENTIAL OR RESORT RESIDENTIAL Are there any other such structures within a radius of 1640.42 FT (500 M) of the proposed location?		
If YES, please provide a site plan showing the locations of these and provide documentary evidence that co-utilization of the existing structure(s) is not a viable alternative to a second structure.		
STEALTH STRUCTURE OPTIONS/SCREENING Will this structure be visible from residential areas?		
If YES, stealth structure options must be used and a description of the stealth structure options must be submitted to the satisfaction of the County.		
LIGHTING & SIGNAGE Is there additional lighting planned in addition to what is required by federal agencies? Please provide a description of all lighting, required and not required.		
What signage will be used? Please describe. No advertising signage shall be permitted.		
NOTIFICATION & PUBLIC CONSULTATION PROCESS All landowners within a distance of 2 miles (3.22 KM) from the proposed structure must be notified. Please provide a letter that the County can circulate on your behalf.		
Was an open house completed by the applicant? Minutes from the open house provided?		
The fee for copying and distributing these letters is $1.50/letter. _____ x $1.50/letter = _____ TOTAL COST The fee for only distributing these letters is $1.00/letter _____ x $1.00/letter = _____ TOTAL COST *(NOTE: It should be noted that a general administrative fee may be added to the cost of facilitating this process in line with the County's approved Fee Bylaw.)*		

APPENDIX B

SUBDIVISION POLICIES

Examples of Subdivision Policies

Vulcan County Land Use Bylaw No. 2020-028

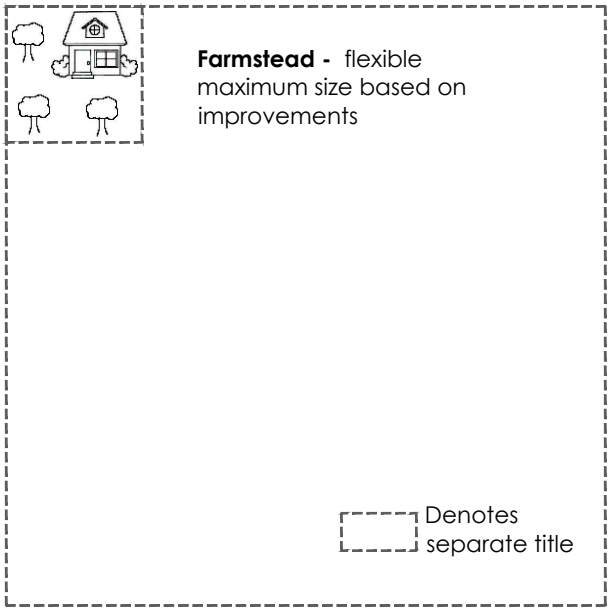

Figure 1:

Example of Single Lot Developed Country Residential subdivision. *Rural General land use district, Schedule 2, Section 11.9*

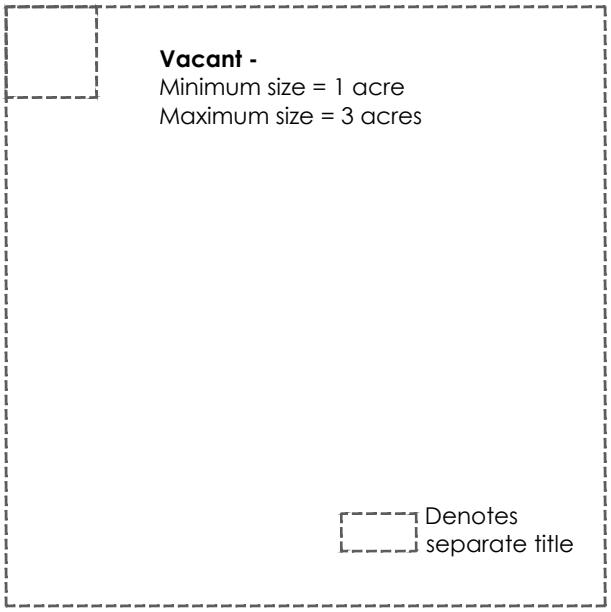

Figure 2:

Example of Single Lot Vacant Country Residential subdivision. *Rural General land use district, Schedule 2, Section 11.10*

Examples of Subdivision Policies

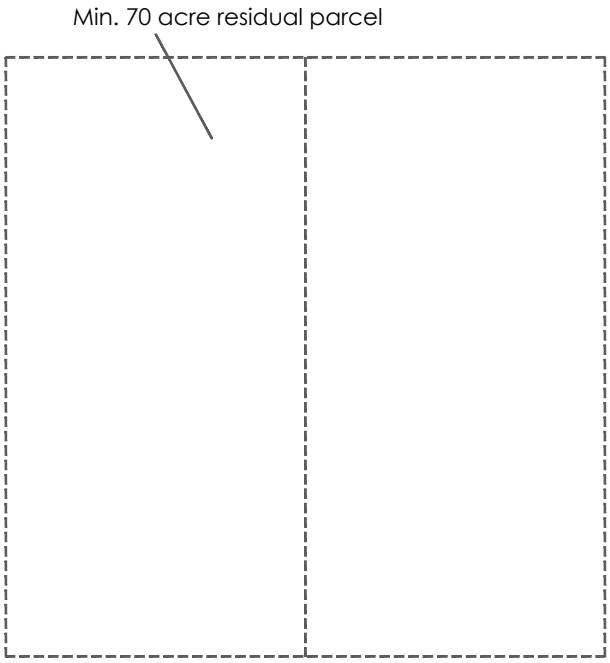

Figure 3:

Example of agricultural subdivision. *Rural General land use district, Schedule 2, Section 11.4.*

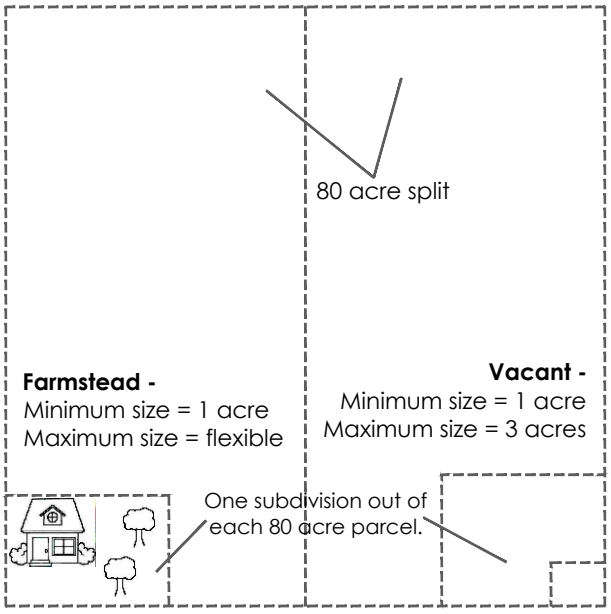

Figure 4:

Example of subdivision options for previously subdivided Rural General parcel. *Rural General land use district, Schedule 2, Section 11.1(d).*

Examples of Subdivision Policies

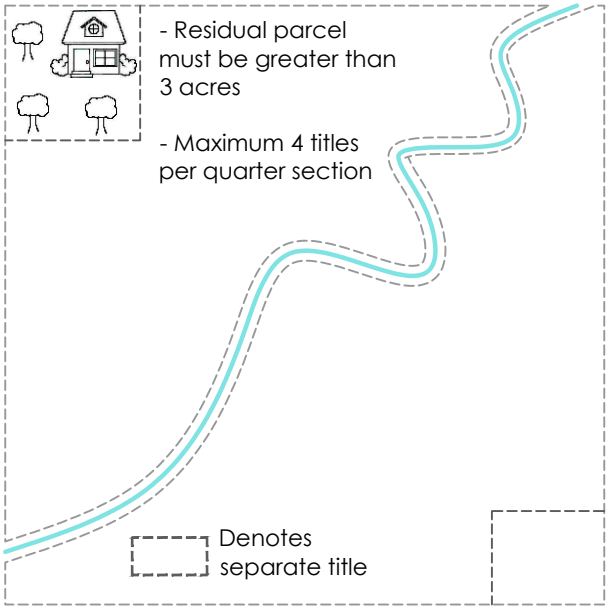

Figure 5:

Example of Cut-off or Fragmented Agricultural Parcel subdivision. *Rural General land use district, Schedule 2, Section 11.6 and 11.7.*

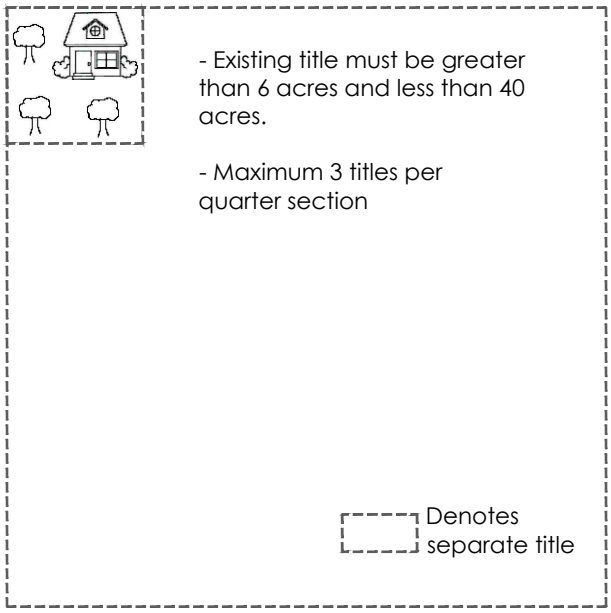

Figure 6:

Example of subdivision of Existing Small Titles. *Rural General land use district, Schedule 2, Section 11.8.*

Examples of Subdivision Policies

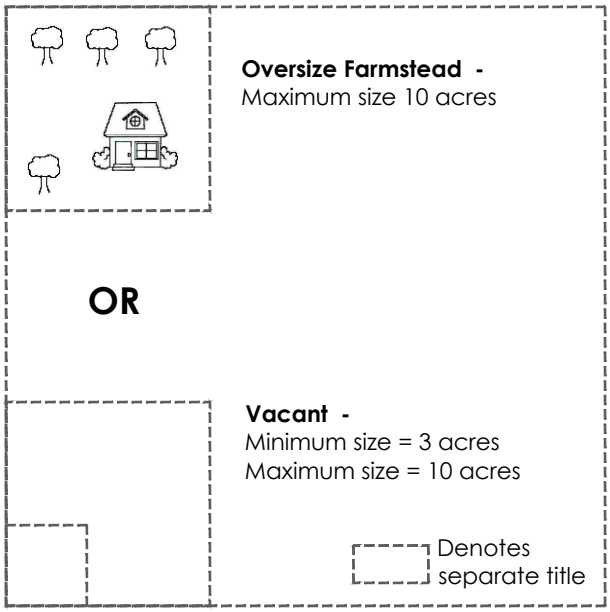

Figure 7:

Example of Single Lot Developed and Single Lot Vacant Country Residential Subdivision for *Small Holdings land use district. Schedule 2, Section 5.*

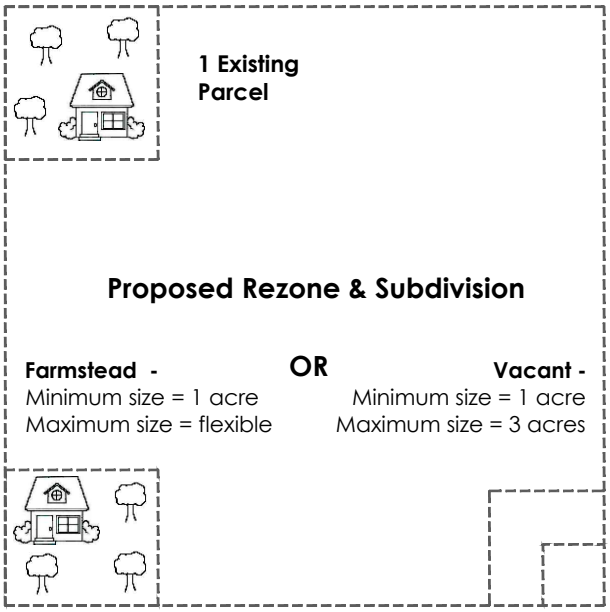

Figure 8:

Example of subdivision options for *Single Lot Country Residential land use district. Schedule 2, Section 5.*

Examples of Subdivision Policies

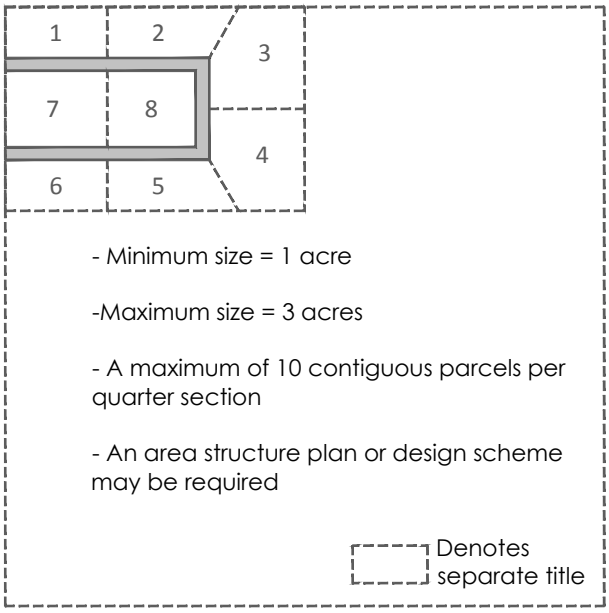

Figure 9:

Example of subdivision for *Grouped Country Residential land use district. Schedule 2, Section 2 & 3.*

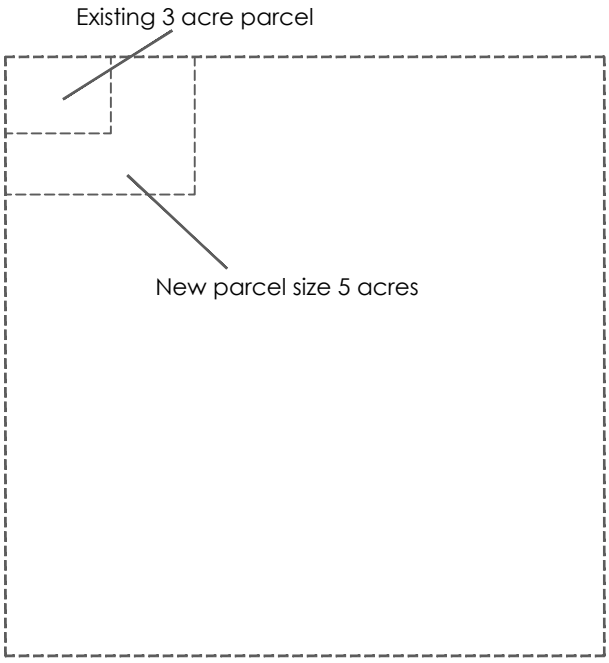

Figure 10:

Example of boundary line adjustment for existing parcel realignment. *Rural General land use district, Schedule 2, Section 11.5.*

APPENDIX C

PROCESS FLOWCHARTS

Land Use Bylaw Amendment

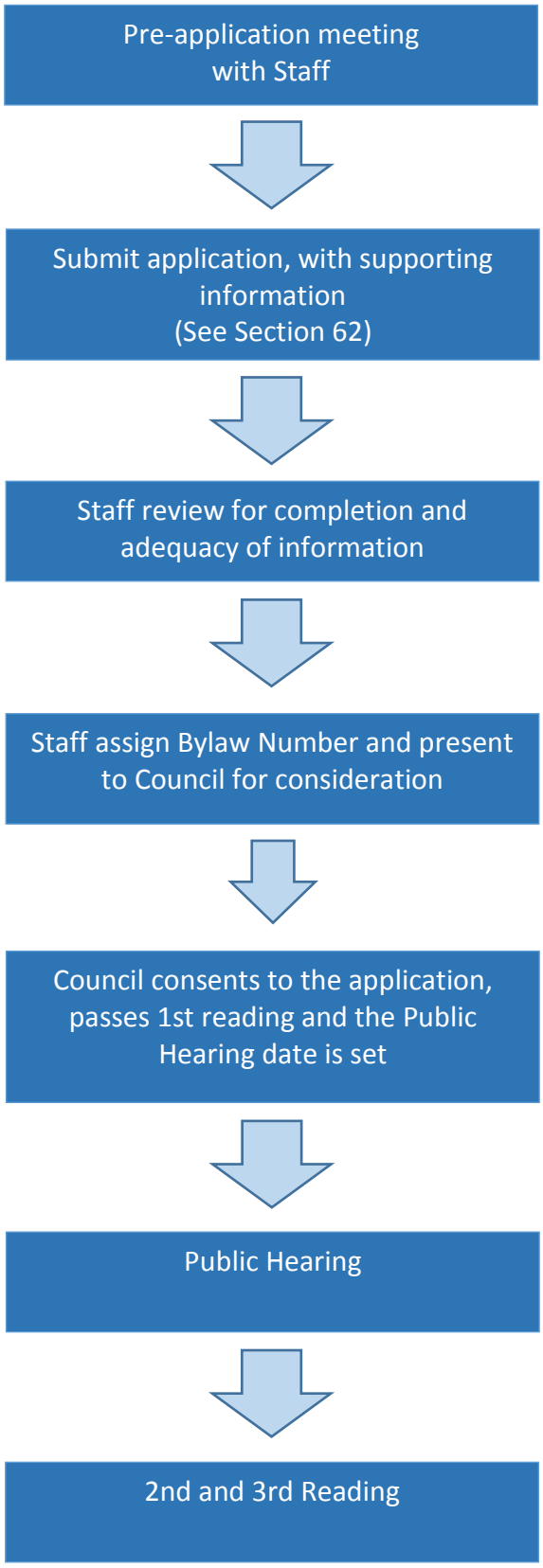

Area Structure Plan (ASP)

4 or less contiguous lots to be created

Pre-application meeting with Staff

Determination, based on review of initial information, that an ASP is not required

Proceed to Subdivision

More than 4 lots to be created or ASP required

Pre-application meeting with Staff

Establish expectations and requirements for ASP
(See Appendix D)

Council authorization for development to prepare ASP

Information gathering, technical studies and key stakeholder input

Developer undertakes ASP process and prepares ASP draft

Staff review for completion and adequacy of information, assigned Bylaw No and presents to Council for 1st Reading

Council passes 1st reading and the Public Hearing date is set

Public Hearing

2nd and 3rd Reading

Subdivision

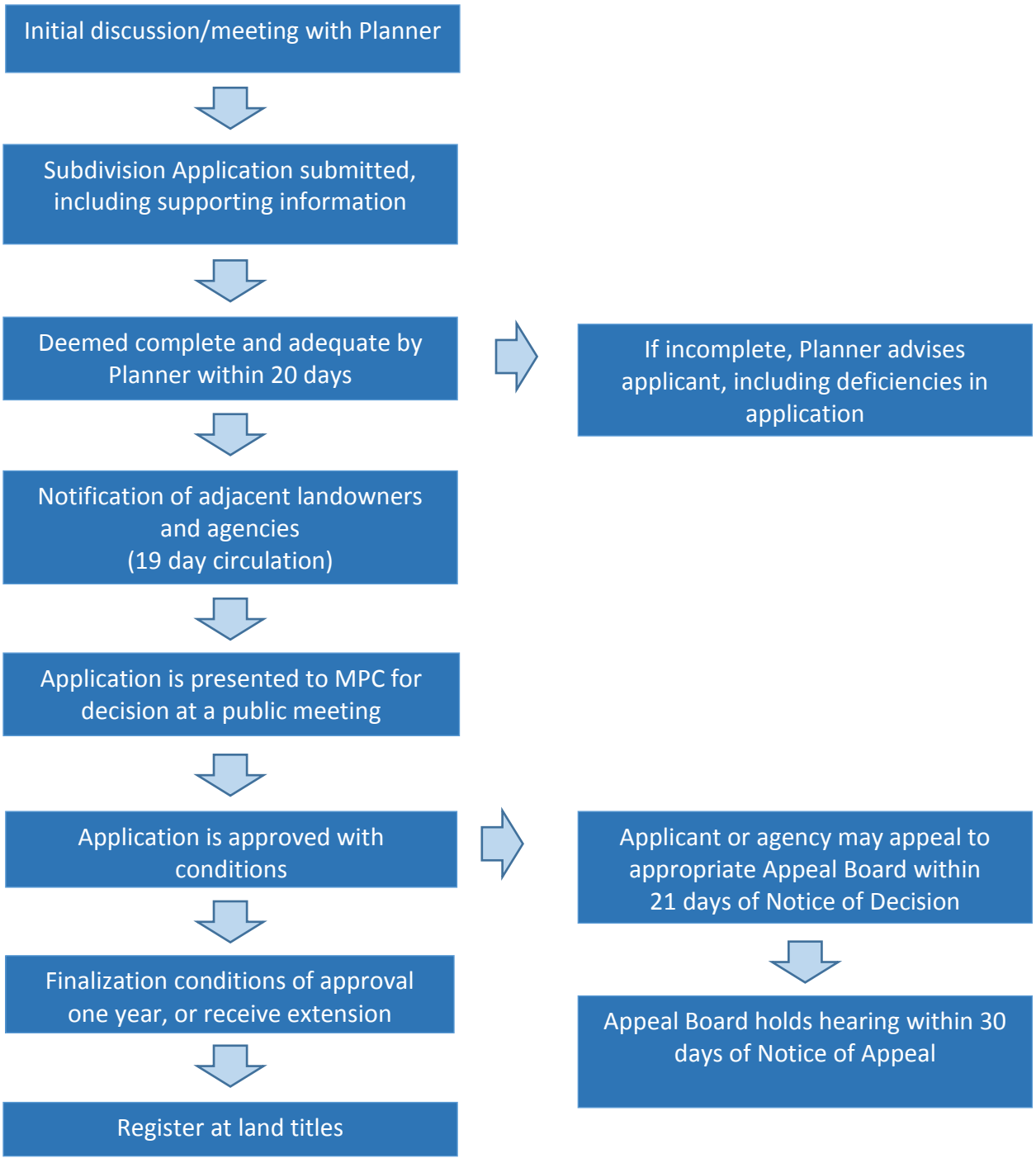

Development Permit

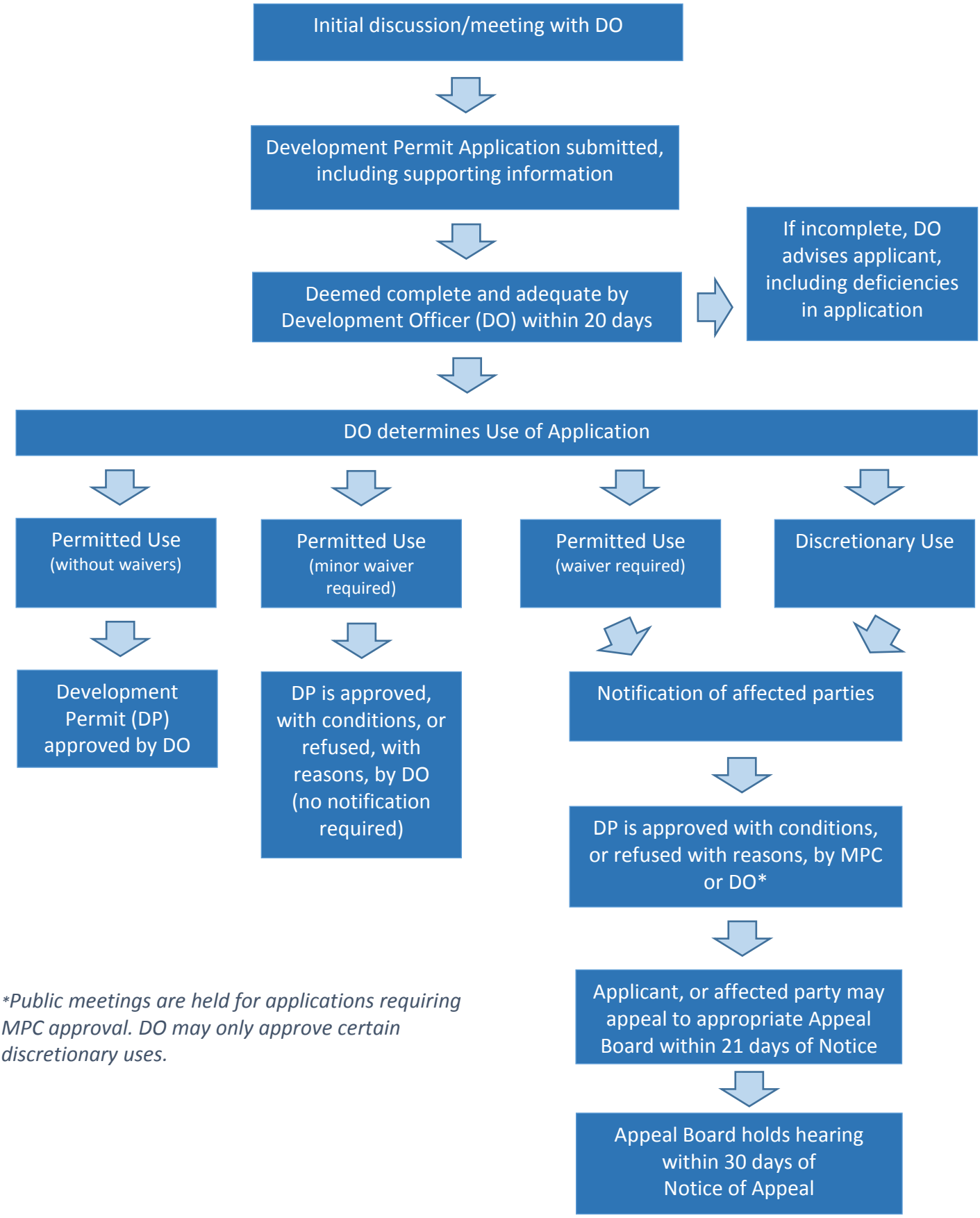

**Public meetings are held for applications requiring MPC approval. DO may only approve certain discretionary uses.*

APPENDIX D

AREA STRUCTURE PLAN GUIDELINES

AREA STRUCTURE PLAN GUIDELINES

Value & Purpose of Area Structure Plans

Area structure plans (ASP) help ensure that future development proceeds in an orderly fashion with the benefit of a public process. Vulcan County recognizes the ability of a comprehensive planning process to help manage the change that comes with future development. These guidelines aim to assist developers in establishing an ASP.

The purpose of an ASP is to provide a framework for the subdivision and development of an area. An ASP is an opportunity to present and explain a developer's vision to County Council and area residents. A well thought out, comprehensive plan typically utilizes professional involvement to provide the technical information needed to determine the suitability of the lands for their proposed use. Ultimately, an ASP limits haphazard development and promotes a sensitive approach to development in relation to surrounding land uses and existing physical conditions, consistent with the process and requirements in sections 633 and 636 of the *Municipal Government Act*.

When is an ASP required?

The County requires the preparation of an ASP in certain circumstances to support future development. The Council of Vulcan County may waive the ASP requirement if it determines that the nature and impact of the proposed development does not warrant an ASP. Similarly, in important planning areas like within the fringe of urban communities or adjacent to water bodies and sensitive environmental areas, or for large-scale development proposals, Council may choose to require an ASP be duly prepared and submitted in respect of the application.

ASP requirements for residential subdivision on a single quarter section:

No ASP

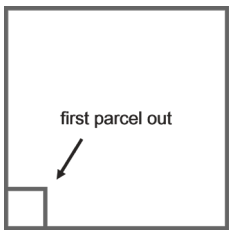

No ASP

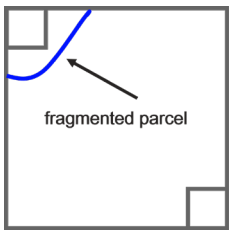

No ASP

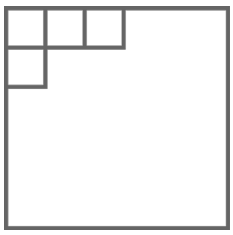

No ASP

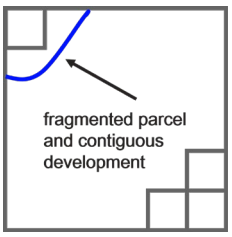

No ASP

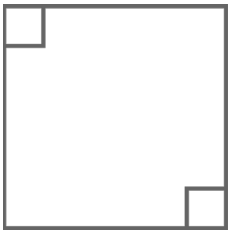

ASP Required

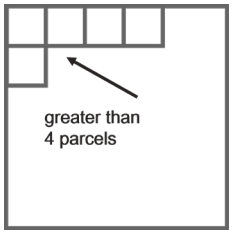

ASP Required

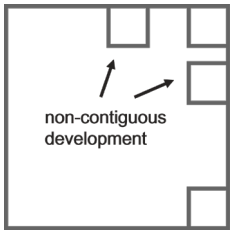

ASP Required Content

A duly prepared area structure plan, prepared by or with the assistance of a qualified professional(s) (ie. engineers, planners, biologists), shall include and address the matters listed bylaw. The information must be based on detail study of the lands as they relate to the development proposal. The topics listed below are a general overview. The content requirements of a particular ASP will vary, and are at the discretion of Council. An ASP is typically constructed as a policy document, with goals and policy statements that convey the intent of the development project. See Appendix E ("Technical Studies") for a detailed overview of required content.

Sample Layout of ASP

Site Analysis

1. Physical & legal site conditions
2. Adjacent land use
3. Geotechnical report
4. Biophysical assessment
5. Environmental site assessment
6. Historical resources assessment
7. Flood risk assessment
8. Wetland assessment

Legislative & Planning Context

9. Compliance with other statutory plans
10. Consistency with relevant planning documents
11. Impact on agriculture and farming practices

Subdivision & Development Concept

12. Land use & population density
13. Conceptual subdivision or site design
14. Municipal and/or environmental reserve land dedication
15. Development concept

Servicing

16. Potable water
17. Sewage disposal
18. Storm water management
19. Traffic impact assessment
20. Access management & road construction
21. Fire suppression & emergency services

Public consultation

22. Adjacent landowner and key stakeholder engagement

Implementation

23. Phasing of subdivision and development

APPENDIX E

TECHNICAL STUDIES

TECHNICAL STUDIES

The list of studies herein is meant to provide an overview of content expectations to developers.

Architectural Controls As a development standard of the area structure plan, architectural controls are suggested to be supplied by the developer to ensure that all development in the development area is consistent with neighbouring property. These controls may be registered concurrently by a restrictive covenant at the time a plan of survey is registered with the Land Titles Office.

Historical Resources Impact Assessment This report evaluates the archaeological, paleontological, historic buildings and structures, and aboriginal traditional uses on the subject site in an effort to preserve and study historic resources. The assessment shall be completed by a qualified professional and performed in accordance with the land use procedure bulletins prepared pursuant to the *Historical Resources Act.*

Environmental Site Assessment This report is an investigation in relation to land to determine the environmental condition of a property in accordance with the Alberta Environmental Site Assessment Standard. A Phase 1 environmental site assessment is focused on the review of records as well as limited site investigation. A Phase 2 environmental site assessment is a more detailed review that includes soil sampling and analysis, and is often needed where adverse conditions, events or contamination have been identified in a Phase 1 ESA.

Wetland Assessment This report identifies, classifies, and provides the necessary legislative and regulatory context for wetlands as they relate to a proposed development project. The report shall be completed by a professional biologist or qualified wetland science practitioner and shall include an assessment of wetland permanency, valuation and disturbance in accordance with the Alberta Wetland Policy.

Waste Management Plan This report, completed by a qualified professional, identifies the waste generated from a development and how that waste will be managed and disposed of in accordance with the *Environmental Enhancement & Protection Act.* The report shall also identify nuisance generation and activities required to mitigate the effect on adjacent land uses.

Contour Map/Elevation Establishment This report establishes the geodetic ground elevations of a site and is prepared by an Alberta Land Surveyor (ALS) or a Certified Survey Technologist (CST). Contours and/or spot (ie. depicting full supply level of a reservoir) are used to understand the topographical characteristics of the site, and to ascertain the implications for drainage, site grading and construction. Where developments are proposed to be built in areas of slopes greater than 10° or where roads and water channelization are to be incorporated in the development, a detailed contour map should be prepared for the development area.

Private Sewage Site Evaluation This review is an overview of a site as it relates to a prospective development and the ability of the site to support a private sewage disposal system. A site evaluation typically includes a review of topography, buildings and utilities, and a soils investigation. The review shall be undertaken by a certified Private Sewage Installer with experience in the region and is a non-conclusive, opinion statement.

Private Sewage System Suitability Analysis This report represents a specific geotechnical investigation of the proposed development area documenting prevailing soil conditions, a soil texture analysis and soil suitability assessment to support an on-site private sewage disposal system. This report must be completed by a qualified professional and in accordance with the Alberta Private Sewage Systems Standard of Practice 2009. Where required, the findings of this report should be incorporated within the servicing study and/or engineering plans and specifications requested in support of the proposed development.

Flood Hazard Assessment (FHA) This study, completed by a qualified professional accredited by APEGA, shall ascertain whether the development area is suitable for the proposed uses by:

(a) determining the risk of flooding at the site now and in the future, and

(b) considering the consequences of the site being flooded and provide recommended mitigation measures and design standards to guide the construction of improvement within the subject lands.

Setback requirements shall also form part of the recommendations and shall be outlined both in writing and graphically through supportive mapping drawn to scale and related to local elevations. Where required, the findings of this report should be incorporated within the servicing study and/or engineering plans and specifications requested in support of the proposed development.

Groundwater Supply Evaluation (GSE) This evaluation, completed by a qualified professional accredited by APEGA, shall assess the potential for one or more aquifers to supply a sustainable volume of water to the proposed development, in addition to determining any possible interference with groundwater supply from existing wells in the area. The evaluation shall typically involve the completion of a single well within the proposed development area pumping over a specified time period, followed by a period of recovery over the same time period. A groundwater supply evaluation must satisfy those requirements as noted under section 23(3)(a) of the *Water Act*.

***Note:** *Should the results of the groundwater supply evaluation indicate that insufficient groundwater supply exists to support the proposed development or impact on existing wells within the area would be profound, the study shall outline alternative means of water supply to the proposed development. This shall include the source of an alternative potable water supply to support the proposed development, and infrastructure to support the water distribution such as cisterns. Where cisterns are suggested, sizing, design and construction considerations should be detailed. All*

alternative means of water supply shall comply with all federal, provincial, and municipal regulations.

Where required, the findings of this report should be incorporated within the servicing study and/or engineering plans and specifications requested in support of the proposed development.

Geotechnical Report This report shall be prepared by a qualified professional engineer accredited by APEGA, identifying and assessing the subsurface soil and groundwater conditions liable to affect suitability of the lands to support the proposed development. The report shall provide conclusions and recommendations to guide the design and construction of the proposed development and associated improvements including both municipal infrastructure and/or private improvements proposed on the subject property inclusive of buildings, structures and/or private services. Where required, the findings of this report shall be incorporated within the servicing study and/or engineering plans and specifications requested in support of the proposed development.

Stormwater Management Plan This plan shall address current and future drainage requirements in support of the proposed development while satisfying constraints imposed by topography, existing and proposed land uses, land ownership, and other local considerations. The plan shall be completed by a qualified professional engineer accredited by APEGA, and shall identify and locate major drainage facilities, including major drainage channel improvements, the location of storm sewer improvements, open channel routes, retention/detention facilities, and land requirements for drainage purposes. Legislative requirements under the *Water Act* and/or the *Environmental Enhancement & Protection Act* shall be outlined. Where required, the findings of this report should be incorporated within the servicing study and/or engineering plans and specifications requested in support of the proposed development.

Biophysical Assessment Prepared by a qualified professional biologist accredited by the Alberta Society of Professional Biologists (ASPB), identifying rare plant and wildlife species/communities, as listed on the current Alberta Natural Heritage Information Center (ANHIC) and Committee on the Status of Endangered Wildlife in Canada (COSEWIC). The findings of this report shall assist in understanding the presence, classification, sensitivity, and impact on the plant and wildlife that exist within the subject site.

Environmental Management Plan Prepared by a qualified professional biologist accredited by the Alberta Society of Professional Biologists (ASPB), indicating the impact of the proposed development on the wildlife, wildlife corridors, vegetation, water and environmental features. The environmental management plan shall outline protection measures in accordance with environmental guidelines and also address mitigation measures, including necessary setbacks distances from significant natural features to mitigate potential impacts borne by the proposed development on the surrounding natural environment. The environmental management plan shall also identify breeding and spawning times for wildlife, and the timing of construction and reclamation activities shall be adjusted accordingly.

Hazards Assessment & Management Plan This plan shall identify any and all potential hazards in relation to the proposed development and how they shall be managed. Suggested hazards include but are not limited to fire, petro chemicals and processing chemicals. The plan shall also include an emergency response plan in the event of an emergency situation.

Reclamation Report This report shall outline the measures to be taken to return the development site to an equivalent land capability, as based on pre-disturbance site assessments of soil, landscape, and vegetation. The plan shall also establish criteria and specifications to guide the design, installation and maintenance of vegetation planted as part of a re-vegetation strategy. Plant species should be chosen in consultation with landowners and reflect species present on adjacent lands.

Fire Protection Plan A fire protection plan is required to ensure adequate improvements to support fire suppression in the case of an emergency within the proposed development area. The fire protection plan must be prepared and submitted to the local fire authority for review and approval with confirmation provided to Vulcan County. Once approved, the owner is responsible for implementing those improvements as outlined within the approved fire protection plan as these will be included within the terms of the development agreement where appropriate. During a fire emergency, a copy of the approved fire safety plan must be available for the responding fire department's use. In general terms, the fire protection plan should include:

- Key contact information including site location and access arrangements;
- Utility services (including shut-off valves for water, gas and electric);
- Access issues to the property;
- Layout, drawing, and location of water supply within the subject property;
- Layout and location of fire suppression infrastructure;
- Incorporation of FireSmart Principles.

Traffic Impact Assessment In order to evaluate the traffic impact of proposed developments, a traffic impact assessment is required. The traffic impact assessment must be prepared by a qualified professional engineer accredited by APEGA, which assesses the potential effects of traffic generation caused by the proposed development on regional and local roadway systems. The traffic impact assessment shall identify and define the study area, the planning horizon and analysis period, the existing traffic conditions, and the estimated traffic demand. Furthermore, a safety analysis, site access analysis, traffic collision analysis, and sight distance evaluation should be conducted. The assessment shall also identify mitigation measures and provide overall recommendations for addressing local and regional traffic impacts. Where required, the findings of this report shall be incorporated within the servicing study and/or engineering plans and specifications requested in support of the proposed development.

Servicing Study This report shall be prepared by a qualified professional engineer accredited by APEGA, which establishes the technical engineering requirements to service the proposed development. The report should compile and summarize relevant information with respect to site grading, proposed water supply and distribution, sanitary sewage collection and treatment, storm drainage system, shallow utilities and public roadways. The report should include discussion pertaining to existing site conditions, proposed site grading, summary of supportive modelling completed and identification of any unique site constraints and/or issues that may affect the servicing of the proposed development. Relevant information from any supportive technical studies should be referenced and summarized in the servicing study. For additional details, please refer to the Vulcan County Design Guidelines and Construction Specifications.

Conceptual Scheme The *Municipal Government Act* also allows for the development of conceptual scheme to obtain greater detail of the proposed development and its future impact on adjacent lands, as well as to demonstrate how this individual application complies with any applicable ASP and the MDP. Vulcan County has determined that conceptual scheme preparation shall be tied to the scope and intensity of proposed development and shall include a public consultation process. Conceptual schemes may be adopted by resolution in conjunction with redesignation and subdivision applications and where appropriate shall be registered on affected titles via a development agreement or other legal instrument to guide, inform and structure the evaluation of future subdivision and development applications.

Public Consultation – Area Structure Plan or Conceptual Scheme In order to ascertain the opinions and concerns of surrounding landowners with regards to the proposed development concept, consultation with the public will need to be undertaken. In support of a conceptual scheme, the consultation should follow an Open House format, shall be fully documented in writing and shall include the following information:

- the names and contact information of all attendees;
- a synopsis of matters discussed;
- a summary of concerns raised;
- a formal response to all concerns raised.

The time and place of the Open House must be advertised in circulating newspapers for two consecutive weeks prior to the meeting and written notification shall be given to Vulcan County. Further, a mail out must be prepared in support of the Open House and can be distributed by Vulcan County on behalf of the applicant, in support of the public consultation. The applicant shall bear all costs.

Engineering Plans and Specifications/Construction Drawings These are required in support of the application to establish the parameters for the construction of improvements associated with the proposed development. Engineering plans and specifications must be completed by a qualified professional engineer accredited by APEGA and include the following:

- Cover Sheet(s);
- Clearing and Grading Drawings;
- Roads, Lanes and Walkways Drawings;
- Traffic Control and Signage Drawing;
- Water Distribution Drawing (if applicable);
- Water Distribution Disinfection and Flushing Drawing (if applicable);
- Sanitary Sewer Drawing (if applicable);
- Storm Sewer Drawing – Major/Minor System;
- Storm Sewer Drawing – Minor System;
- Shallow Utilities Drawing;
- Building Grade Drawing;
- Landscape Drawing;
- Erosion Control and Sedimentation Drawing.

Upon completion, two sets of complete construction drawings are required to be submitted to Vulcan County for preliminary review and approval. Additional circulation of the shallow utilities plan is required to be circulated by the developer to appropriate utility companies for review and approval. Each utility company is required to submit an approval letter for inclusion with the development agreement via the developer. Upon acceptance, a final set of construction drawings may be required for inclusion with the development and servicing agreement in support of the proposed development. For additional details on drawing specifications, and requirement and development agreement procedures refer to the Vulcan County Design Guidelines.

APPENDIX F

CONFINED FEEDING OPERATIONS

CONFINED FEEDING OPERATIONS

For the purposes of understanding the thresholds established in the *Agricultural Operations, Part 2 Matters Regulation,* wherein an approval is required by the Natural Resources Conservation Board.

Threshold Levels

Category of Livestock	**Type of Livestock**	**Column 2**	**Column 3**
		Number of Animals (registration)	**Number of Animals (approvals)**
Feedlot Animals	Cows/Finishers (900+ lbs)	150 – 349	350+
	Feeders (450 – 900 lbs)	200 – 499	500+
	Feeder Calves (< 550 lbs)	360 – 899	900+
	Horses – PMU	100 – 399	400+
	Horses – Feeders > 750 lbs	100 – 299	300+
	Horses – Foals < 750 lbs	350 – 999	1000+
	Mules	100 – 299	300+
	Donkeys	150 – 449	500+
	Bison	150 – 349	350+
Dairy (*count lactating cows only)	Lactating cows* (Lactating cows only –associated Dries, Heifers and Calves are not counted)	50 – 199	200+
Swine (*count sows only)	Farrow to finish*	30 – 249	250+
	Farrow to wean*	50 – 999	1000+
	Farrow only*	60 – 1249	1250+
	Feeders/Boars	500 – 3299	3300+
	Growers/Roasters	500 – 5999	6000+
	Weaners	500 – 8999	9000+
Poultry	Chicken – Breeders	1000 – 15999	16000+
	Chicken – Layer (includes associated pullets)	5000 – 29999	30000+
	Chicken – Pullets/Broilers	2000 – 59999	60000+
	Turkeys – Toms/Breeders	1000 – 29999	30000+
	Turkey – Hens (light)	1000 – 29999	30000+
	Turkey – Broiler	1000 – 29999	30000+
	Ducks	1000 – 29999	30000+
	Geese	1000 – 29999	30000+

Goats and Sheep	Sheep – Ewes/Rams	300 – 1999	2000+
	Sheep – Ewes with Lambs	200 – 1999	2000+
	Sheep – Lambs	1000 – 4999	5000+
	Sheep – Feeders	500 – 2499	2500+
	Goats – Meat/Milk	200 – 1999	2000+
	Goats – Nannies/Billies	400 – 2999	3000+
	Goats – Feeders	500 – 4999	5000+
Cervid	Elk	150 – 399	400+
	Deer	200 – 999	1000+
Wild Boar	Feeders	100 – 299	300+
	Sow (farrowing)	50 – 99	100+

- When Dairy Replacement Heifers are housed away from the dairy, treat as Beef – Feeders.
- When Dairy calves are housed away from the dairy, treat as Beef– Feeder Calves.

APPENDIX G

POST & CABLE BARRICADE STANDARDS

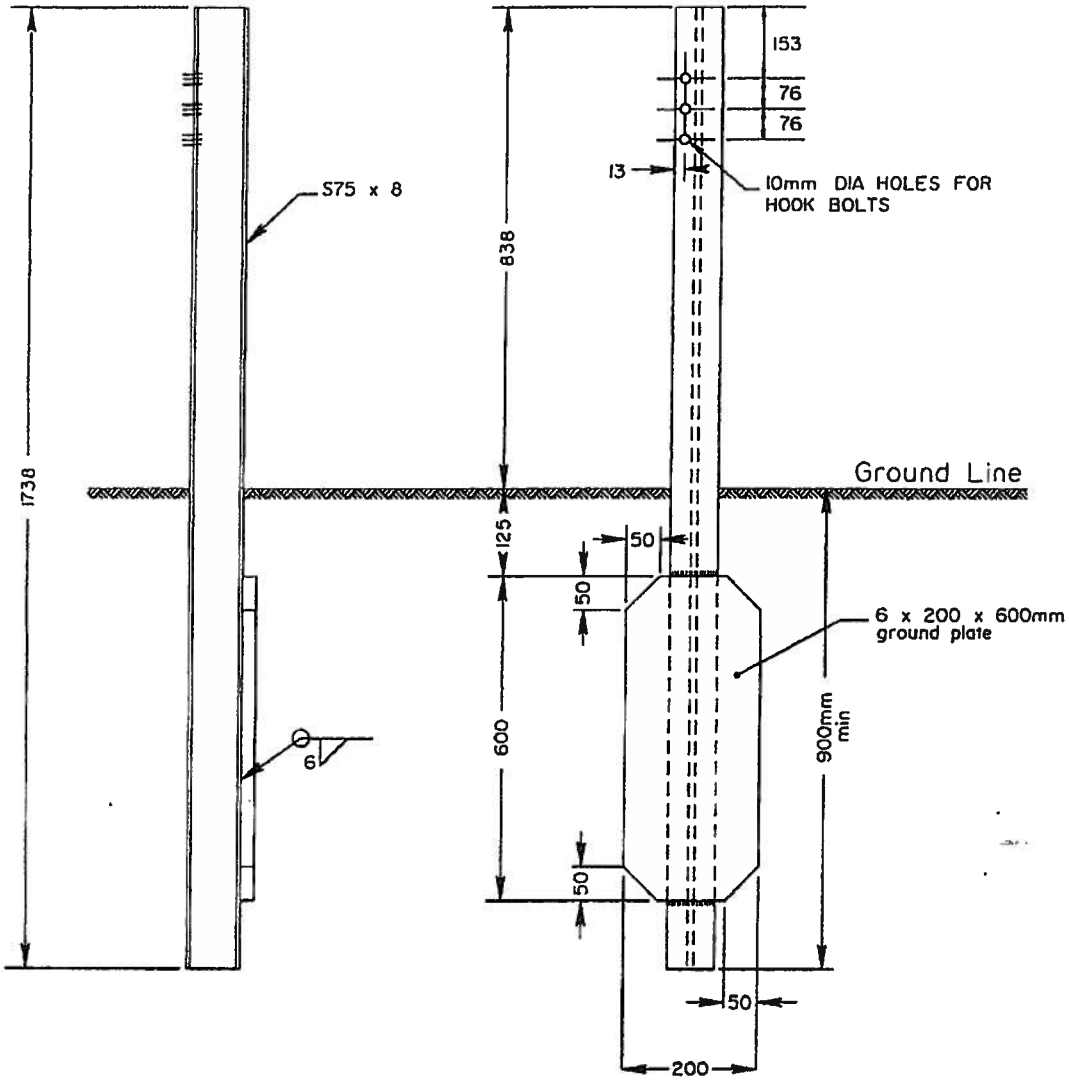

All dimensions are in millimetres unles otherwise indicated.

Alberta TRANSPORTATION AND UTILITIES Traffic Enigineering Section Roadway Engineering Branch	DWG. No.	TEB 3.42
	Date	DEC.17/92
	Revision	June 95
	Revision	

STANDARD CABLE GUARDRAIL POST DETAIL

A.D. Cherwenuk, Director

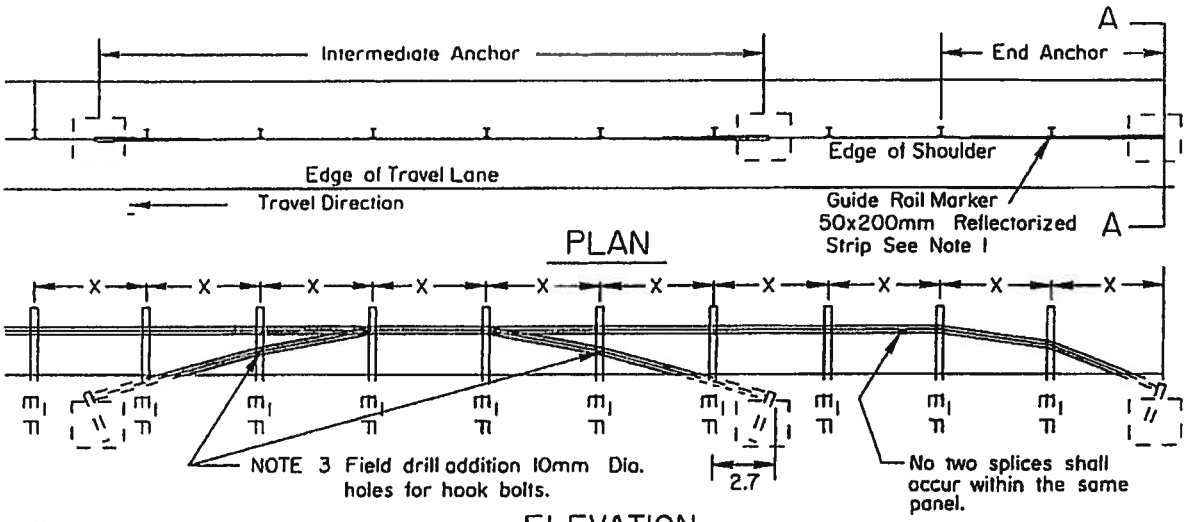

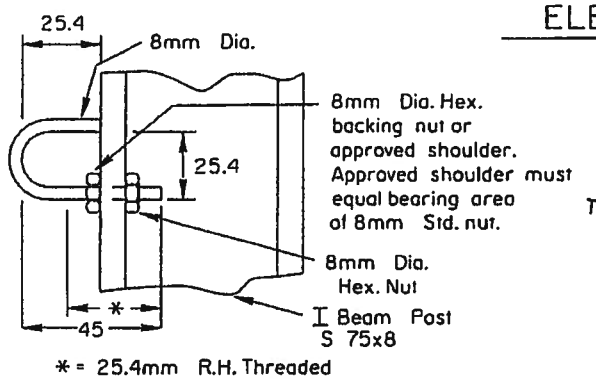

HOOK BOLTS

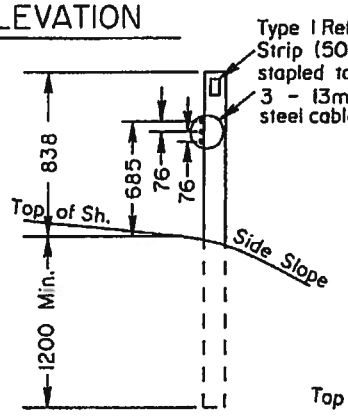

POST DETAIL

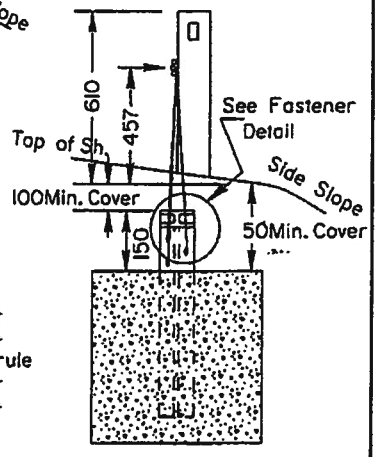

SECTION A - A

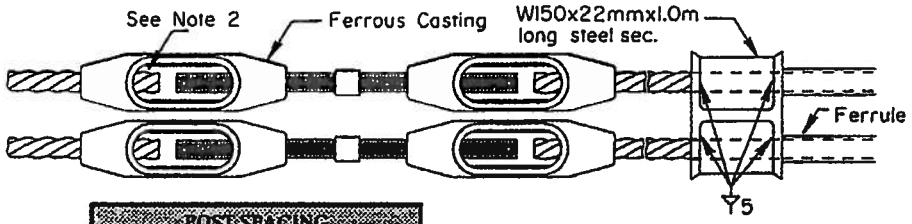

END FITTING

POST SPACING	
Radius of curvature	X
Greater than 70m	3.6m
Less than 70m	1.8m

Reflectorized strips of Grade 1 Sign Material (50x100mm) adhered to top of post. The strips are to be located 25mm below the top of post.

Ends of cable stands must protude past the end of wedge 10mm.

Field drill additional 10mm holes for hook bolts at the elevation of 457mm, 381mm and 305mm (End posts for transition only).

Minimum length of installation 46.80m, distance between anchor blocks not to exceed 305.0m.

Posts are to be set by instrument for alignment and grade with tops parallel to pavement grade.

Cables to be tensioned so sag between posts shall not exceed 6.3mm. Cable splices are not to be less than 150.0m apart.

This standard to be read in conjunction with TEB 3.42, TEB 3.44 and TEB 3.45.

All demensions are in millimetres unless otherwise shown.

Alberta
TRANSPORTATION AND UTILITIES
Traffic Operations Branch

DWG. No.	TEB 3.43
Date	DEC. 13/92
Revision	
Revision	

STANDARD CABLE GUARDRAIL INSTALLATION AT SHOULDER

A.D. Cherwenuk, Director

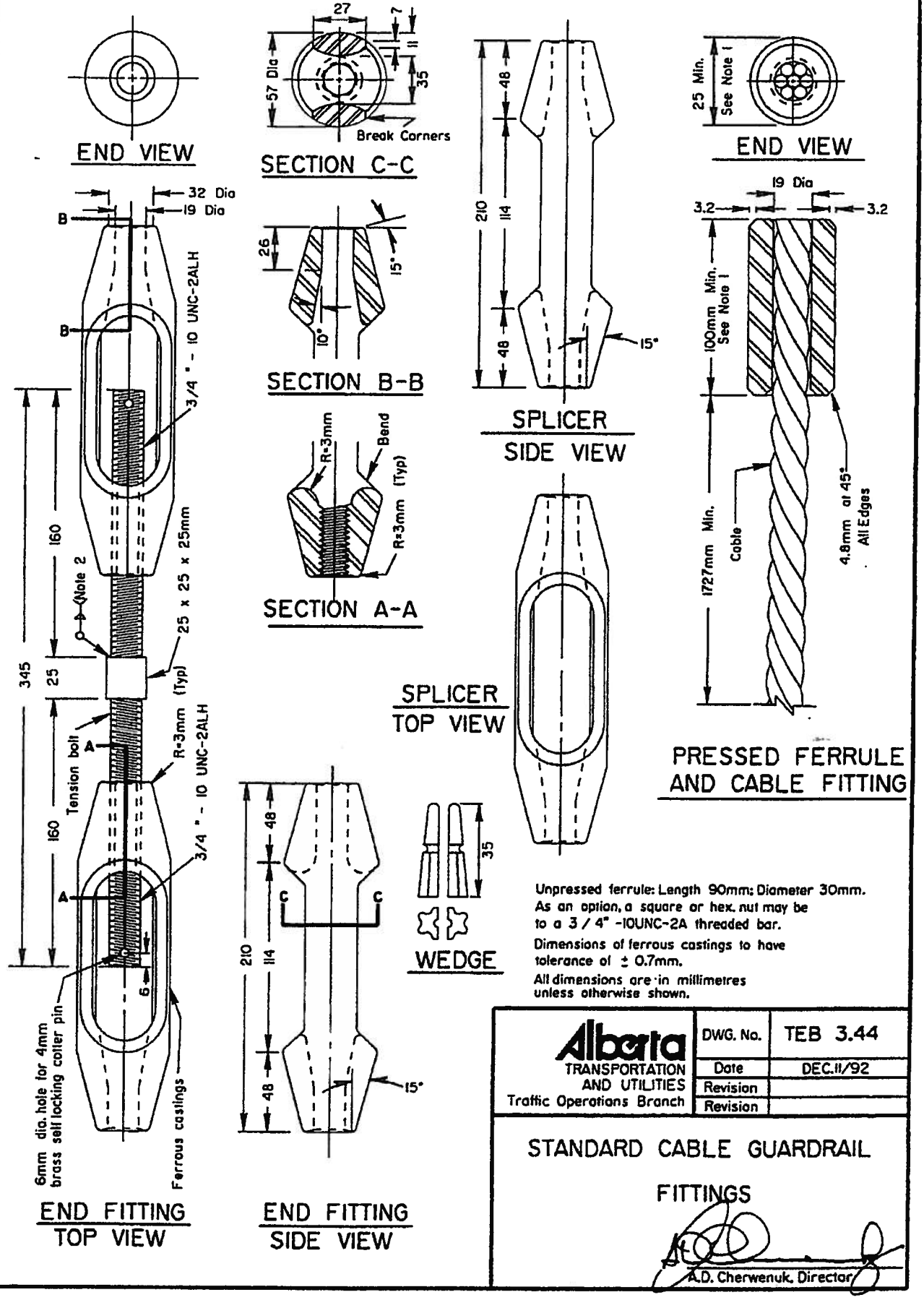
END VIEW
SECTION C-C
27
7
11
35
57 Dia
Break Corners
SECTION B-B
26
15°
10°
SECTION A-A
R=3mm
Bend
R=3mm (Typ)
SPLICER
SIDE VIEW
210
114
48
48
15°
SPLICER
TOP VIEW
END VIEW
25 Min.
See Note 1
19 Dia
3.2
3.2
100mm Min.
See Note 1
1727mm Min.
Cable
4.8mm at 45°
All Edges
PRESSED FERRULE
AND CABLE FITTING
32 Dia
19 Dia
B
B
3/4 " - 10 UNC-2ALH
160
(Note 2)
25 x 25 x 25mm
345
25
Tension bolt
A
R=3mm (Typ)
160
3/4 " - 10 UNC-2ALH
A
6
6mm dia. hole for 4mm
brass self locking coller pin
Ferrous castings
END FITTING
TOP VIEW
210
114
48
48
C
C
15°
END FITTING
SIDE VIEW
35
WEDGE
Unpressed ferrule: Length 90mm; Diameter 30mm.
As an option, a square or hex. nut may be
to a 3 / 4" -10UNC-2A threaded bar.
Dimensions of ferrous castings to have
tolerance of ± 0.7mm.
All dimensions are in millimetres
unless otherwise shown.
Alberta
TRANSPORTATION
AND UTILITIES
Traffic Operations Branch
DWG. No.
TEB 3.44
Date
DEC.11/92
Revision
Revision
STANDARD CABLE GUARDRAIL
FITTINGS
A.D. Cherwenuk, Director

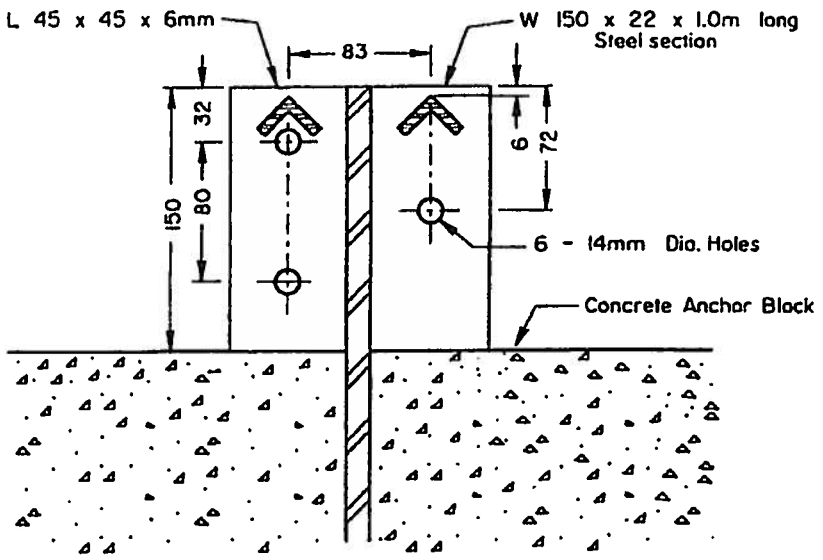

Section A - A for 3 Cable

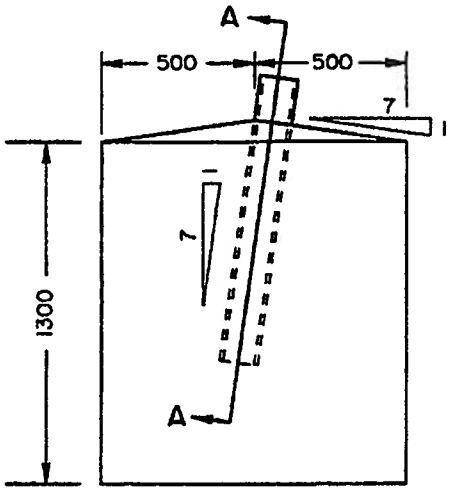

Anchor Block
Side View

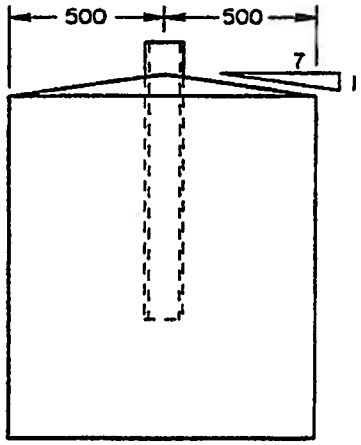

Anchor Block
Front View

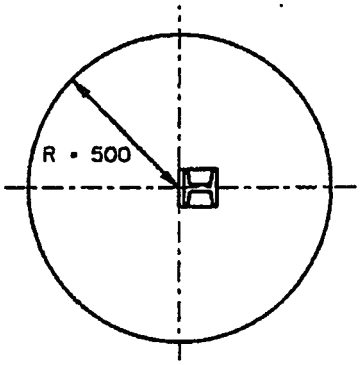

Anchor Block
Top View

All dimensions are in millimetres unless otherwise indicated

Alberta TRANSPORTATION AND UTILITIES Traffic Operations Branch	DWG. No.	TEB 3.45
	Date	DEC. 13/92
	Revision	
	Revision	

STANDARD CABLE GUARDRAIL
CONCRETE ANCHOR BLOCK

A.D. Cherwenuk, Director